VOL. 15 NOTES FROM THE SHOP NO. 87

Woodsmith®

Old Fashioned Jelly Cupboard

Plus

Silverware Tray

Model Fire Truck

No. 87 June, 1993

Woodsmith®

Editor Donald B. Peschke
Managing Editor Douglas L. Hicks
Assistant Editors James M. Dolan, Philip A. Totten, Jonathan Garbison

Creative Director Ted Kralicek
Art Director Rod Stoakes
Senior Illustrator David Kreyling
Illustrators Dirk Ver Steeg, Cinda Shambaugh
Photographer Crayola England
Electronic Graphics Chris Glowacki
Design Director Ken Munkel
Senior Designer Jan Hale Svec
Designer Kent Welsh
Shop Manager Steve Curtis

Circulation Director Liz Bredeson
Subscription Manager Sandy Baum
Circulation Analyst Rod Cain
Newsstand Sales Kent A. Buckton

PUBLISHING SERVICES

Associate Editor: Gordon C. Gaippe • *Senior Graphic Artist:* Robert H. Whitmer • *Illustrator:* Mark Higdon

CORPORATE SERVICES

Controller: Paul E. Gray • *Accounting:* Laura Thomas *Bookkeeping:* Julianne Spears • *Information Services Manager:* Joyce Moore • *Electronic Pub. Coord.:* Doug Lidster • *Administrative Assts:* Cheryl A. Scott, Julia Fish • *Receptionist:* Jeanne Johnson • *Building Maintenance:* Ken Griffith, Archie Krause

WOODSMITH MAIL ORDER

Marketing Director: Robert Murry • *Art Director:* Cindy Jackson • *Catalog Products Manager:* Bob Baker • *Project Supplies:* Linda Jones • *Technical Support* Jeff Janes • *Systems Operator:* Linda Morrow

CUSTOMER SERVICE

Manager: Valerie Wiese • *Supervisor:* Jennie Enos *Cust. Service Reps:* Jennifer Murphy, Joy Johnson, Sara Kono, Ami Blanshan, Anna Cox, Chris Lo

SHIPPING DEPARTMENT

Supervisor: Jerry Carson • *Fulfillment Staff:* Gloria Sheehan, Donnie McVey, Chuck Carlson, Sylvia Carey

WOODSMITH STORE

Manager: Dave Larson • *Sales Staff:* Wendell Stone, Dominic Bazzocco, Steve Johnson • *Office Manager:* Vicki Edwards

Woodsmith® (ISSN 0164-4114) is published bimonthly (Feb., Apr., June, Aug., Oct., Dec.) by Woodsmith Corp., 2200 Grand, Des Moines, LA 50312.
Woodsmith® is a registered trademark of Woodsmith Corp. Copyright© 1993 Woodsmith Corporation. All rights reserved.
Subscriptions: Single copy: $3.95. One year subscription (6 issues), $17.95. Two years (12 issues), $31.95. (Canada/Foreign add $5 per year, U.S. funds.)
Second Class Postage Paid at Des Moines, IA and at additional offices.
Postmaster: Send change of address to *Woodsmith*, Box 10718, Des Moines, IA 50350.
Subscription Questions? Call 1-800-333-5075, 8:00 am to 5:00 pm, Central Time, weekdays.
PRINTED IN U.S.A.

EDITOR'S COLUMN

Sawdust

Did you ever complete a project and get the feeling that if you had added just a *little* more detail it would be a *whole lot* better? That's what happened with the model Fire Truck we're featuring in this issue. Let me explain.

Our design director, Ken Munkel, has been wanting to build this model for some time. (His first project for us was the "Classic Roadster" way back in issue No. 51.)

So I finally told Ken to go ahead with the Fire Truck. Before I knew it, he had the truck designed and built. Then he brought the model into my office and pointed out his favorite part the extension ladders that hang on the side of the truck. Try them out. They actually work." And they did.

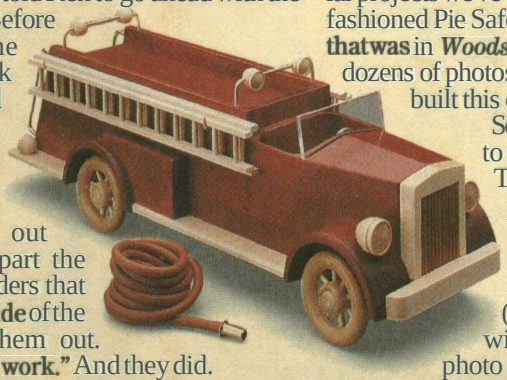

I was fascinated with how they worked. It was great fun to slide them up and down on the dovetail rabbets.

FINISHING TOUCHES. A couple of days later I was in the shop and noticed the Fire Truck sitting on the bench. But it seemed a little different than I remembered.

Ken explained that he had taken a close look at the model truck and added a few "finishing touches." Little taillights, headlights, and brass rails. Small details. But they made a big difference in the look of the Fire Truck.

As a matter of fact, Ken seemed so pleased with the truck that he decided to build a second one and even dyed this one red. Then he found a rubber "firehose" and brass fitting for a nozzle to make it look even more authentic.

The point is it's little details like these that finish off a project Whether it's a brass rail on the back of a Fire Truck or a slight roundover on the edge of a table, taking the time to do a little more almost always improves the final look.

A TOY? I'd like to say something else here about the Fire Truck. This really isn't a toy for young kids to play with. As a matter of fact I would strongly recommend that this Fire Truck *not* be given to any child under the age of four. Small parts that add detail can come loose and get swallowed creating a dangerous situation.

It was designed as a display model, but I suppose you could give it to an older child who is going to respect it and handle it with care. Maybe with an explanation about how it doesn't belong in the bottom of the toy box underneath the Ninja Turtles.

JELLY CUPBOARD. One of the most popular projects we've ever featured was the old-fashioned Pie Safe with punched tin panels that was in *Woodsmith* No. 55. I've received dozens of photos from readers who have built this country project

So for this issue I decided to build a similar project. The Jelly Cupboard on page 6 is quite a bit narrower than the pie safe, but it's designed to accept the same size panels. (We're also showing it with wood panels, see the photo on the next page.)

I wanted to offer some new patterns to punch in the tin. We've come up with three new patterns to add to three of the most popular patterns from the Pie Safe. All six patterns are shown on page 31.

If you haven't punched tin before, you'll find that it's a fairly easy (but time-consuming) process. If you order the tin, we'll include step-by-step instructions on how to punch the tin and "age" it so it immediately looks like an antique.

CUSTOMER SERVICE. We receive a lot of positive comments about our customer service. I've always believed that *Woodsmith's* first goal is to serve woodworkers. One way we do this is through our Customer Service Department

As a matter of fact, I think it's a real plus that we are one of the few magazines who handle our own customer service phone calls. When you call *Woodsmith*, you get *Woodsmith*. Not some big company in another city that answers phones for lots of different magazines.

NEW FACE. All of this discussion about customer service is my clever way of introducing our new customer service manager, Valerie Wiese. Valerie has considerable experience in this area and should help continue our tradition of serving woodworkers.

Don

A LOOK INSIDE

Contents

Tips & Techniques 4 *Six great tips. 1) Laying Out Shelf Holes. 2) Bandsawing Multiples. 3) Light-Duty Clamps. 4) A Better Vise Handle. 5) Reinforcing Miter Joints. 6) Sanding Chamfers. Plus Two Quick Tips.*

Jelly Cupboard 6 *The door on this Jelly Cupboard offers a choice. It can be solid wood with a "raised" field or punched tin for more of a country look.*

Wood Movement 12 *You can't stop wood from moving. But there are ways to design a project so it doesn't come apart later.*

Clamping Tips 14 *Clamps by themselves are great tools. But sometimes they need a little help. Here are some tips to make ordinary clamps even more useful.*

Shop Notes 16 *1) Centered Dadoes on the Table Saw. 2) Making Quarter-Round Molding. 3) Cutting Raised Panels. 4) Routing Custom-Fit Dadoes.*

Compound Miters 18 *Cutting compound miters accurately can be quite a challenge. Here's the step-by-step procedure we follow to obtain the best results.*

Silverware Tray 22 *Angled sides make it easy to get at the contents of this tray. The handle divides the tray into two sections.*

Fire Truck 24 *This Fire Truck looks like an authentic replica. But adding the realistic-looking details doesn't require any special tools.*

Sources 31 *Hardware and supplies needed for the projects in this issue.*

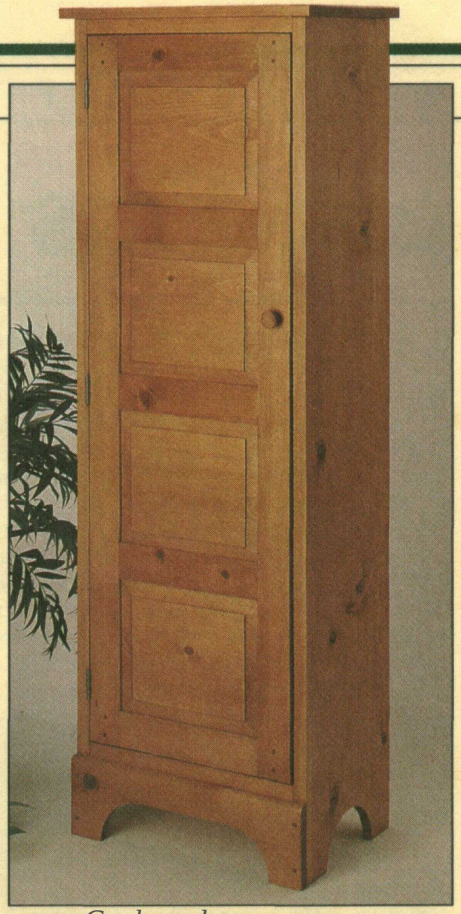

Jelly Cupboard *page 6*

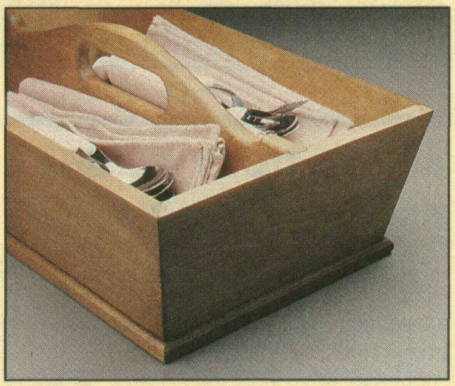

Silverware Tray *page 22*

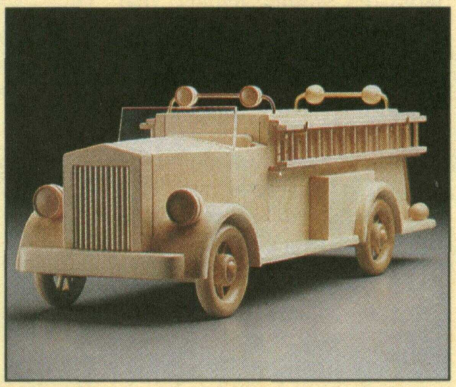

Fire Truck *page 24*

Tips & Techniques

LAYING OUT SHELF HOLES

• It usually takes a lot of time to lay out and drill uniformly-spaced holes for shelf brackets in cabinets. But I get around this by using a length of **drywall** corner bead to position the holes.

To position and drill the holes, first lay the bead over the corner of the workpiece, pressing it against the edge, **see** Fig. 1. Now locate and drill the first hole.

To keep the bead in place, I insert a shelf bracket into the first hole, see Fig. 1. And then drill and pin the last hole in the same manner.

With the bead pinned, drill the remaining holes. When drilling the holes, press the corner bead tight against the edge of the workpiece to ensure the holes are drilled in a straight line.

Dave Malott
Coldwater, Michigan

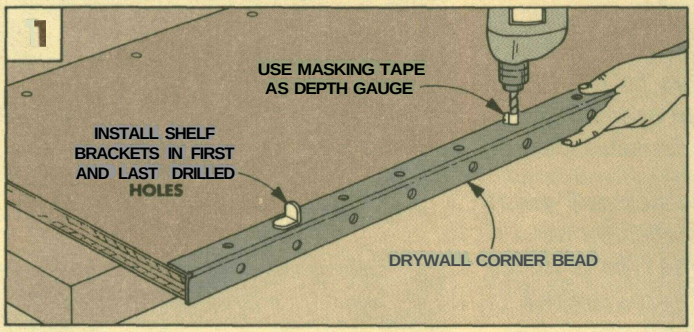

BANDSAWING MULTIPLES

• I built the Slant Front Desk featured in *Woodsmith* No. 86 and used a different technique for cutting the arcs on the front of the pigeonhole dividers. By **bandsawing** the arcs on all the pieces at the same time, they all came out identical.

You could tape or screw the dividers together. But it's hard **to get** the sides and corners of all the dividers perfectly aligned. With my method you don't have to worry about alignment, it's done quickly and automatically.

I use two blocks of wood with a 90° notch cut in each block, see Fig. la. The dividers are stacked on top of each other, then trapped between the blocks. The arcs are then cut at the same time, see Fig. 1.

Clyde T. Mitchell
Big Bend, Wisconsin

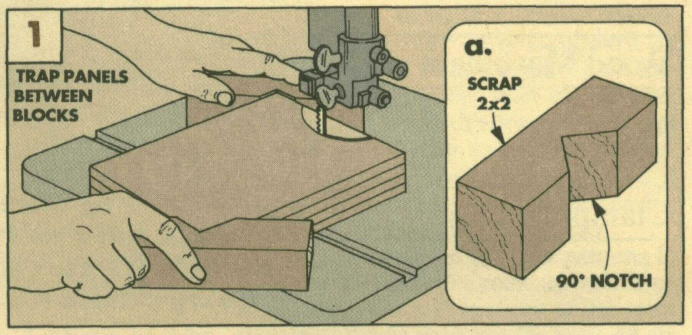

LIGHT-DUTY CLAMPS

• Instead of buying some light-weight clamps for a recent **project,** I made my own from two strips of scrap and two large **rubber** bands, see Fig. **1.** They look and **work** like large clothes pins.

The rubber bands I use are the large, **¼"-wide** type (my newspaper carrier uses them to wrap the Sunday paper). Just wrap the bands around the strips until **they're** tight.

One thing about these clamps though — they have some "memory," see Fig. 2. So after each use, I just turn the strips around **so I** can reuse them. This slight bend also seems to make the clamps grip a little better.

William Bosch
Greeley, Colorado

Editor's Note: We found that adding strips of adhesive-backed sandpaper also helped the clamp grip better.

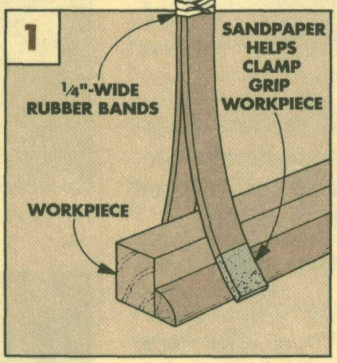

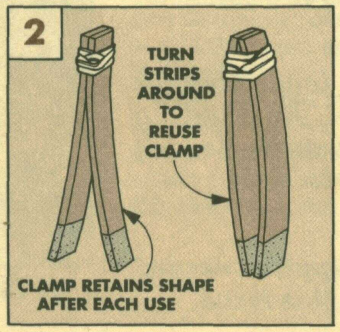

A BETTER VISE HANPLE

• Most European-style workbench plans feature a tail vise and an end vise. And most of these vises require that you **make** your own handle.

When building my bench, I wanted a handle that would be easy to grab and feel good in my hand. The handle I designed is **made from a large** dowel **and** two **2"-dia.** wooden balls, see Fig. 2.

To make the handle, first drill a **¾"-deep** hole in the center of each ball, **see** Fig. **1.** (The **diameter** of the hole must match the diameter of the dowel.)

Then, before gluing the balls to the dowel, I slipped a large 0-**ring** over each end of the dowel, see Fig. 2. The rubber **O-rings** absorb most of the shock when the balls drop against the vise. (0-rings can be purchased from most hardware stores.)

John Morris
Haddonfield, New Jersey

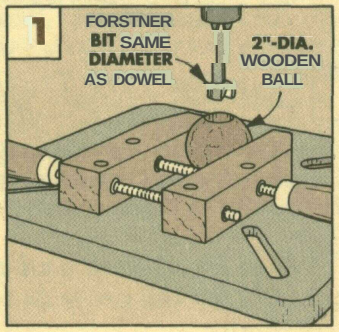

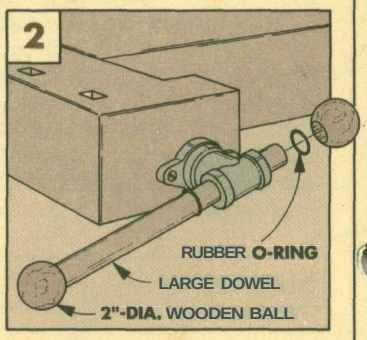

REINFORCING MITER JOINTS

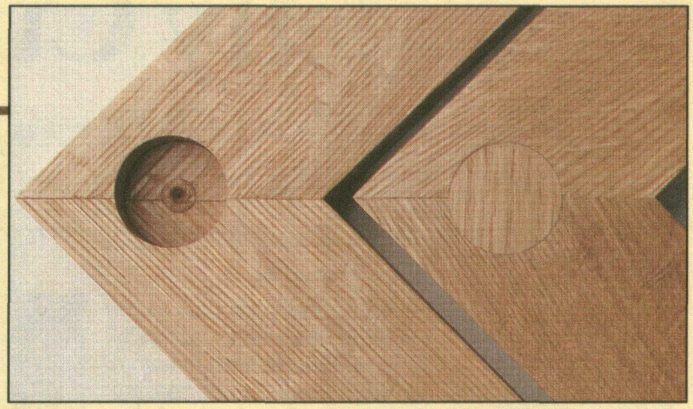

• Mitered corners need reinforcement And there are many ways to do it One way I reinforce miters is to bridge the joint with a large plug — it strengthens the joint by gluing face grain to face grain, see Fig. 1.

First, I glue up the mitered joint without the plug. Once the glue has dried, I drill a 1"-dia. shallow hole in the back side of each mitered corner, refer to Step 1 in Fig. 2. The hole should be centered on the joint line, and drilled only halfway through the thickness of the frame.

Next, I use a 1"-dia. plug cutter to cut a plug from the same material as the frame, refer to Step 2. (If you're thinking of using a short length of dowel instead of a plug, it won't work. The plug gives you more face-to-face gluing. A dowel gives you a weak end grain glue joint.)

Now glue and clamp the plug in the hole, with the smooth side of the plug face down and the grain of the plug running perpendicular to the joint line, refer to Step 3. Once the glue is dry, sand the plug smooth.

Robert Taugher
Grosse Pointe Woods, Michigan

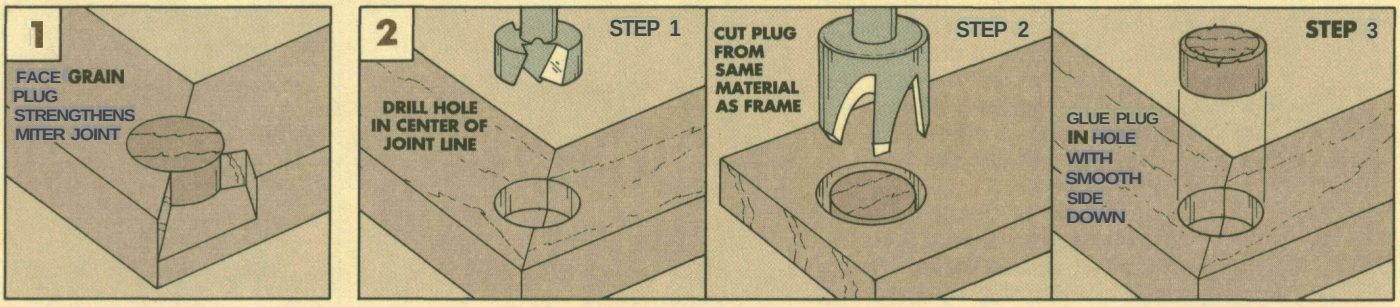

SANPING CHAMFERS

• When sanding chamfered corners, it's just about impossible to keep from rounding over the edges of the chamfers — especially narrow chamfers. To avoid this, I use a sanding block made just for chamfers.

The sanding block is built from two pieces of scrap and 1/8"-thick cork, see Fig. 1. The rectangular section keeps the sanding block flat on the workpiece. The beveled section holds adhesive-backed sandpaper (such as 3M's Stikit) and rides against the chamfer.

Thomas E. Bussey
Cedar Falls, Iowa

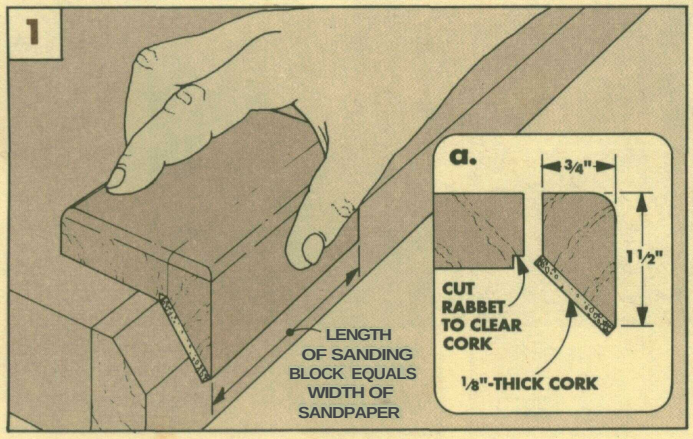

QUICK TIPS

NON-SUP PUSH STICK

• Recently I was ripping thin strips on my table saw. Every once in a while the push stick would slip off the workpiece.

To prevent this, I glued a small piece of old inner tube to the bottom of the push stick. The rubber doesn't slip off the wood, so now I have better control.

Martin N. Glickman
Beverly Hills, Florida

TACK CLOTH

■ After sanding a project, I like to wipe it down with a tack cloth before applying the finish. But I use a different type of tack cloth. Mine is just a soft cotton cloth sprayed with a light coat of *Endust Dusting and Cleaning Spray*. (*Endust* doesn't contain wax or silicone. So it won't cause finishing problems later.)

Just spray a small amount on both sides of the cloth and allow the cloth to dry completely. Then fold the cloth so it fits in your hand.

When wiping up the dust, wipe in one direction (not in circles). And fold back the dirty side of the cloth between passes.

Stephen Hodge
Kankakee, Illinois

SEND IN YOUR TIPS

If you would like to share an original tip or idea, just send it to *Woodsmith* Tips and Techniques, 2200 Grand Avenue, Des Moines, Iowa 50312.

We will pay (upon publication) $25 to $100, depending on the published length of the tip. Please include an explanation, a photo or sketch (we'll draw a new one), and a daytime telephone number, in case we have some questions.

Jelly Cupboard

There are probably a dozen ways to join the boards when building a cupboard. But for this project we kept it simple — mostly dadoes and rabbets. These make the cupboard easier to build, and it looks more "country."

Joinery **decisions...they** go into every project. Like the shelves in this Jelly Cupboard. These could **have** been mounted on adjustable shelf brackets for holding different-size cans and jars. But I did something different this time.

By installing the shelves in dadoes in the cupboard sides, the shelves are permanently attached to the sides. The joints are strong and the shelves won't twist. So the shelves are both structural *and* functional.

BACK SLATS. The back of the cupboard also helps to hold the unit together. But there was a decision to make here, too. Ordinarily I use plywood for a cabinet back, but for a **"country"** project like this, plywood would look out of place.

So I used solid pine for the **back — but** it's not glued up into a panel. Instead, I cut **rabbets** on the mating edges of the back slats to create what's called a "ship lap" joint This allows the back slats to expand and contract without pushing the sides of the cupboard away from the shelves.

FINISH. I decided to stain the cupboard to **give it the look** of aged pine. But stain **on** pine can turn out blotchy. So first I sealed the surface with **McCloskey's** Stain Controller and Sealer. Then I applied a 50/50 mixture of **Minwax** Golden **Oak** and Colonial Maple. Finally, I covered the stain with two coats of General Finishes' Royal Finish **(satin)**.

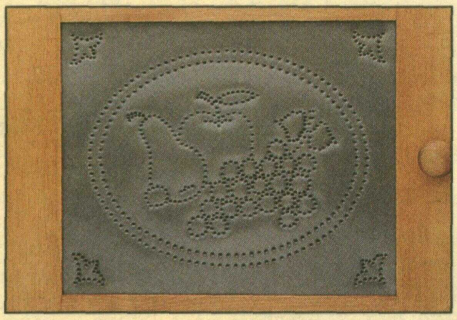

Hand-punched tin panels can be substituted for the wood panels in the door. For six pattern alternatives, see page 31.

EXPLODED VIEW

OVERALL DIMENSIONS:
20"W x 12¾"D x 58"H

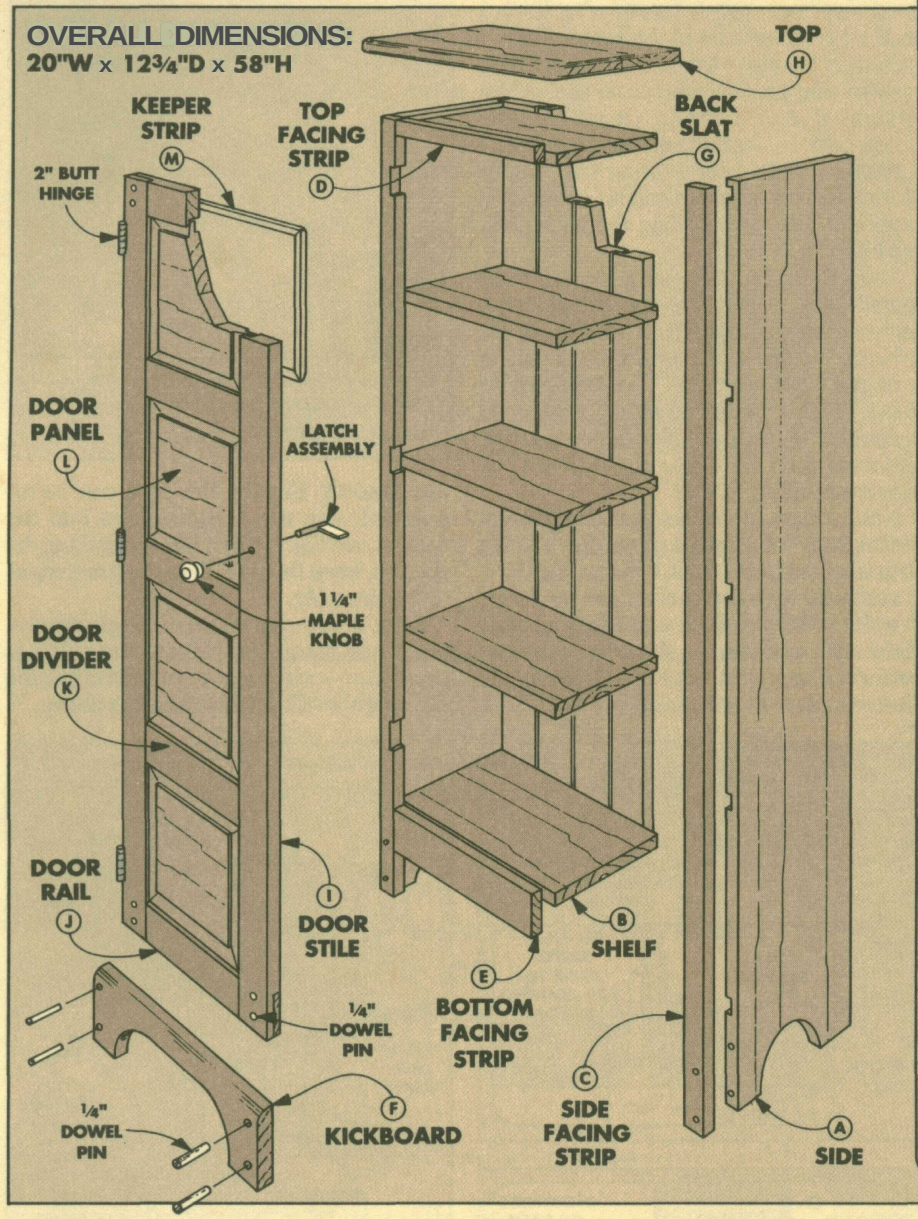

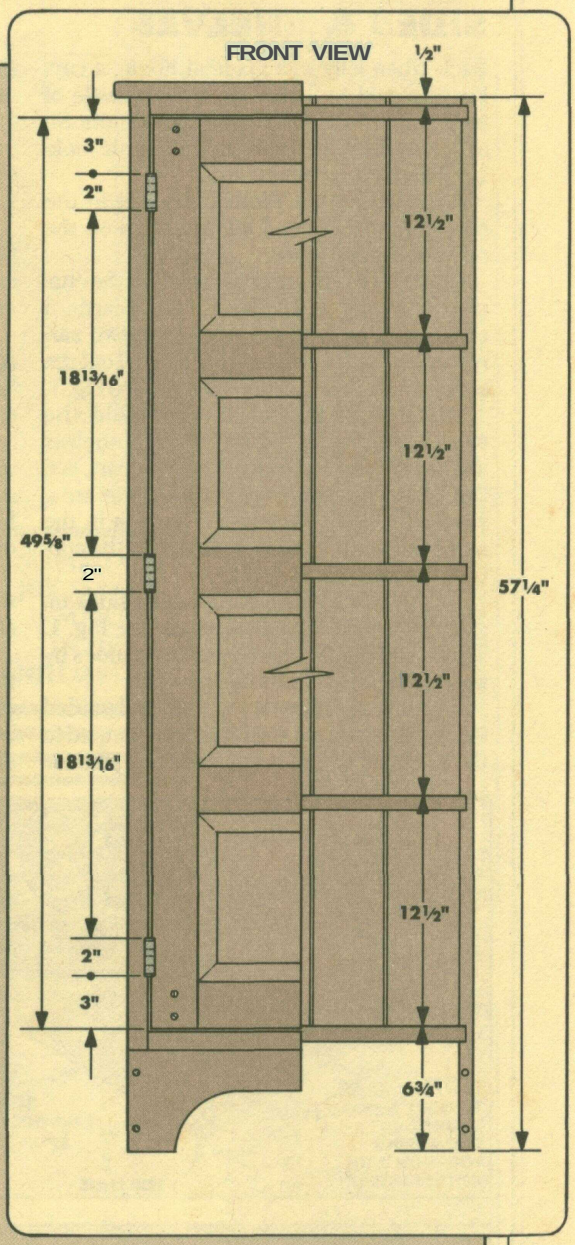

MATERIALS

CASE

A	Sides (2)	¾ x 11¼ - 57¼
B	Shelves (5)	¾ x 10½ -17¾
C	Facing Strips - Side (2)	¾ x 1 - 57¼
D	Facing Strip - Top (1)	¾ x 1 - 16½
E	Facing Strip - Bott. (1)	¾ x 2 - 16½
F	Kickboard (1)	¾ x 5½ - 18½
G	Back Slats (4)	3/4 x 4% - 51¼
H	Top (1)	¾ x 12¾ - 20

DOOR

I	Door Stiles (2)	¾ x 2½ -49%
J	Door Rails - Top/Bott.(2)	¾x 2½ - 16⅜
K	Door Dividers (3)	¾ x 2½ - 12⅛
L	Door Panels (4)	¾ x 9⅞ - 12
M	Keeper Strips (16)	¼ x ¼ - 13" rgh

CUTTING DIAGRAM

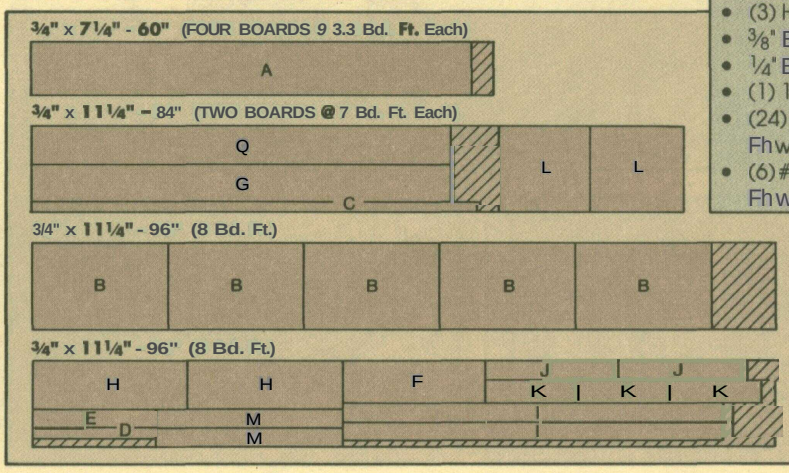

SUPPLIES

- (3) Hinges - 2" x 1 9/16"
- ⅜" Birch Dowel - 12"
- ¼" Birch Dowel - 18"
- (1) 1¼" Maple Knob
- (24) #8 x 1½" Fh woodscrews
- (6) #8 x 1¾" Fh woodscrews

NOTE:
KEEPER STRIPS (M) ARE CUT FROM OVERSIZE BLANKS

SIDES & SHELVES

Back when jelly was made at home, a cupboard would probably have been made of pine. And it would have had some knots. So to make this Jelly Cupboard authentic looking, I used #2 common pine.

After letting the lumber dry out in the shop for two weeks, I started work on the sides of the cupboard.

CUT TO SIZE. In order to minimize the cupping that may occur with wide boards, I edge-glued each of the sides from two narrower boards. When the glue dried, I cut the sides (A) to finished dimensions, see Fig. 1.

SHELF DADOES. Five shelves hold the sides of the cupboard together. The shelves are held in dadoes spaced evenly apart, see the Front View on page 7. But there are a couple tricks to routing the dadoes in the sides and getting them to align after the cupboard is assembled.

First, I clamped both cupboard sides together with the inside faces *up*, see Fig. 1. Then I laid out the position of the dadoes by measuring down from the top end.

To follow the lines for the dadoes, I guided the router against a straightedge clamped to the workpiece. And because the ¾" pine for the shelves was slightly *less* than ¾" thick, I used a ½" straight bit in the router. Then I routed each dado to the correct width in two passes using a removable spacer against the straightedge, see Fig. 1. (Refer to Shop Notes, page 16, for more on this technique.)

BACK RABBET. After routing the dadoes for the shelves, a rabbet can be cut in each cupboard side for installing the back slats, see Figs. 2 and 2a.

Shop Note: To make sure the rabbet is routed along the correct edges (the sides are "mirror" images), it helps to first stand the sides up and mark the edges to be rabbeted.

DECORATIVE CUT-OUTS. The last CUtS tO make on the cupboard sides are mostly decorative — semi-circular cut-outs at the bottom of each piece, see Fig. 3. These cut-outs create a pair of "feet."

Note: Although the feet start out different widths, they'll end up the same after a facing strip is added to the front, refer to Fig. 6.

SHELVES. Now the shelves can be ripped to width so they're flush with the front edge of the sides and also the shoulder of the rabbet for the back slats, see Fig. 5. Then cut the shelves (B) to length, see Fig. 4.

SQUARE-CUT NAILS

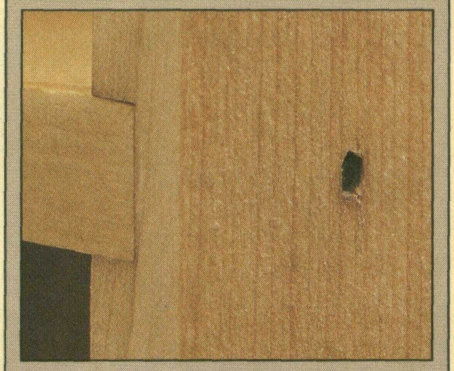

Square-cut nails are an authentic detail. They go into pre-drilled holes, then are "set" with a punch before sanding.

ASSEMBLY. Finally, the case can be assembled with the shelves glued into the dadoes, see Fig. 5. Note: When installing the shelves, keep them flush to the front edges of the sides (A).

Also, if you don't have enough clamps, you could assemble the case the old-fashioned way — with square-cut nails to pull the sides tight to the shelves, see box above.

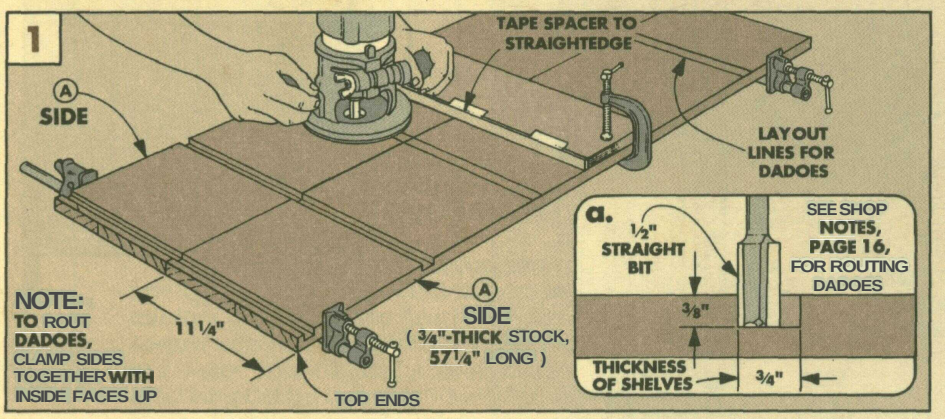

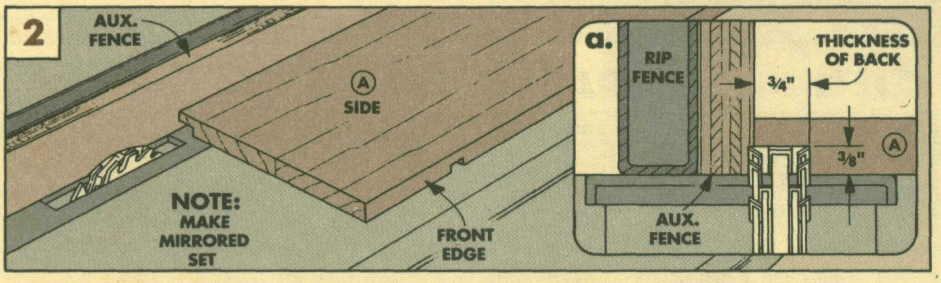

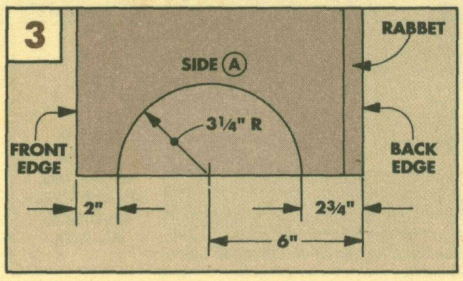

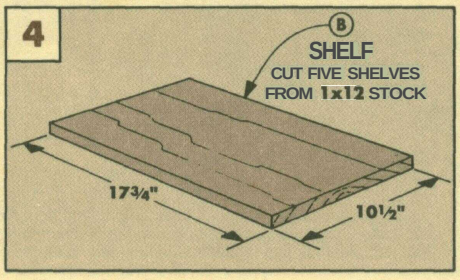

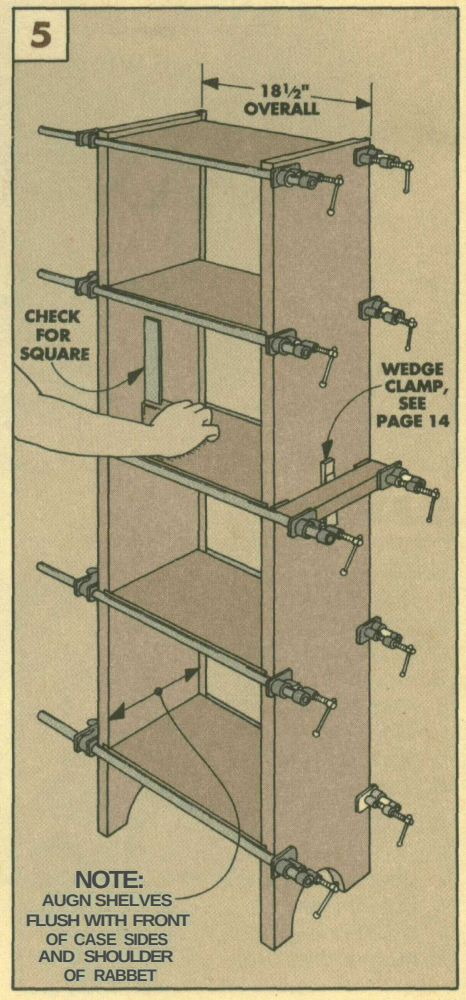

FACING STRIPS

At this point the project has evolved into an open-front bookshelf. To give it more of a finished **"cupboard"** look, and also to create a frame that surrounds the door, facing strips are added next

RIP TO **WIDTH**. The strips are attached to the front edge of the cabinet sides and to the top and bottom shelves, see Fig. 6.

First, I ripped two **side facing strips (C)** and one **top facing strip (D)** to the same width, see Fig. 6a.

SIDE STRIPS. **Now cut the** side strips **to** the same length as the cupboard sides. Then attach these to the edges of the cupboard with glue and clamps, see Fig. 6.

TOP & **BOTTOM** STRIPS. Next, I ripped a piece of pine for the **bottom facing strip (E),** see Fig. 6. This will be mostly hidden later — it's mainly to fill in between the bottom shelf and the **kickboard,** refer to Fig. 8.

Then the top and bottom strips can be cut to fit between the side strips, see Fig. 6.

ATTACH TO CASE. Before gluing **on the** top and bottom strips, make a mark on the top and bottom shelves to indicate where the strips should be glued on, see Figs. 6a and 6b. By attaching the strips in these locations (instead of flush with the **shelf),** a lip is **created** at the top and bottom of the door opening. These lips serve as door stops when the door (attached later) is closed, refer to the Front View on page 7.

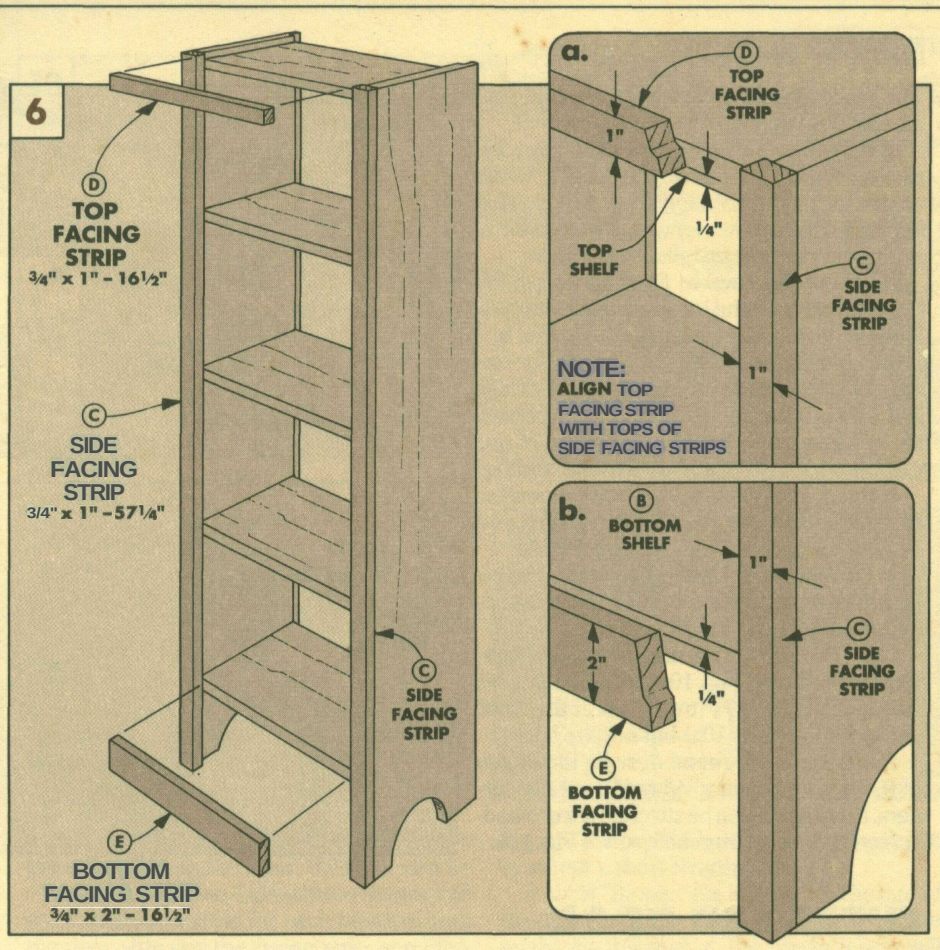

KICKBOARD

A kickboard at the bottom of the cupboard adds a decorative look to the project. (So it **doesn't** look **"boxy."**)

CUT TO SIZE. To make the kickboard, first rip a piece of stock to width, see Fig. 7. Then cut the **kickboard (F)** to length to match the width of the case.

ROUND **OVER** TOP EDGE. Next, to soften the transition between the kickboard and the lower facing strip, rout a round-over along the top outside edge of the kickboard, see Fig. 7a.

CUT OUT TOE OPENING. Then, to create the actual toe opening on the kickboard, I **cut out** a profile along the bottom, see Fig. 7. This shape complements the shape of the **cut-outs** on the side pieces.

ATTACH TO CASE. Now the kickboard can be attached to the case. But I did this the old-fashioned way, with exposed dowels, see Fig. **8.** To do this, clamp the kickboard **to** the case and drill two holes **that** go through the kickboard and facing strip into the cupboard side, see Fig. 8a.

Then cut four lengths of dowel to fit in the holes. Note: Cut the dowels so they stand proud of the kickboard when **they're** tapped into the holes, see Fig. **8a.** This way they can be trimmed flush after they're glued in place.

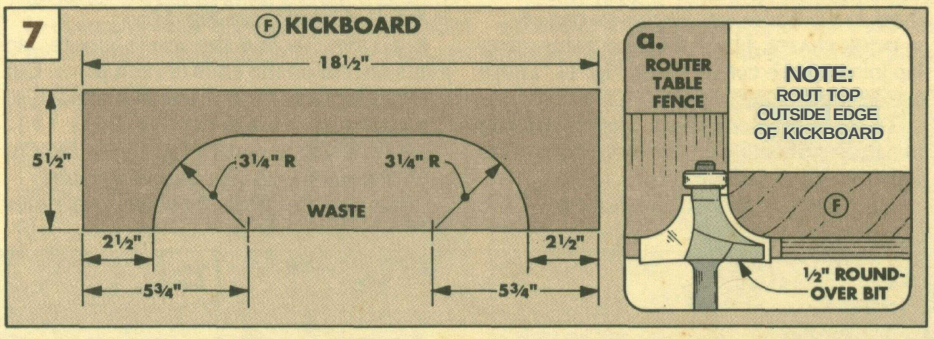

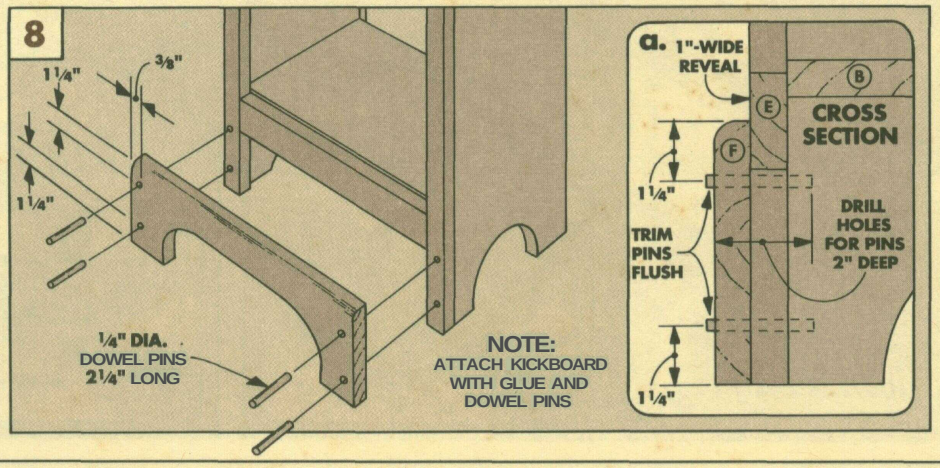

BACK & TOP

The back of the cupboard is made of individual slats, rather than one solid panel.

CUT TO SIZE. To make the slats, start by ripping four back slats (G) to the same width from ¾"-thick stock, see Fig. 9. The finished width allows for a 1/16" gap on both sides when they're installed, see Fig. 9a.

Next, cut the slats to finished length so they extend from the top of the cabinet sides to the bottom of the lower shelf, see Fig. 9.

SHIP LAPS. A ship lap joint allows for expansion between the back slats. It's really just overlapping rabbet joints. The rabbets are cut to a depth half the thickness of the mating pieces (⅜"), and to identical width.

Note: Cut a rabbet on *both* (opposite) edges of the two middle slats, but on just *one* edge of the two outside slats, see Fig. 9a.

ATTACH SLATS. Now the back slats can be screwed to the cabinet, keeping the gaps between them equal, see Fig. 9a.

TOP. The top (H) is made from an edge-glued blank, see Fig. 10. Cut it to finished size to allow for a ¾" overhang at the front and sides (see Fig. 10a) but *not* the back.

Next, rout a ⅛" round-over on the edges of the top, and sand a ⅛" radius on the corners. Now the top can be attached using wood-screws driven up from below, see Fig. 10a.

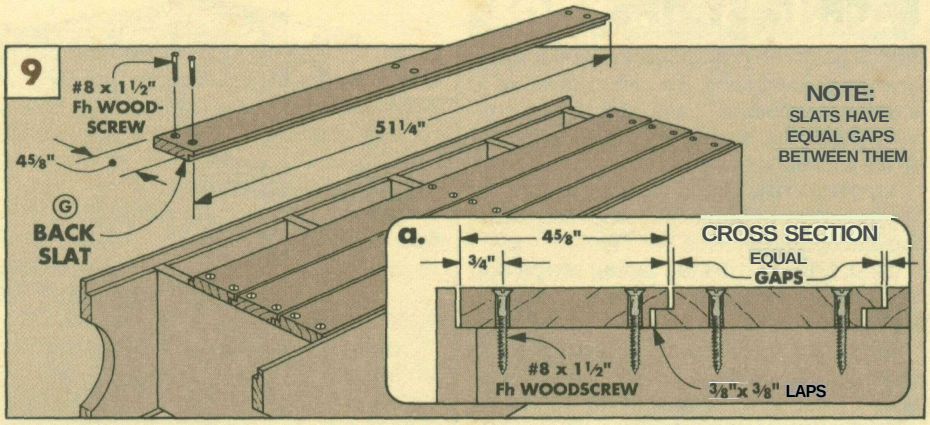

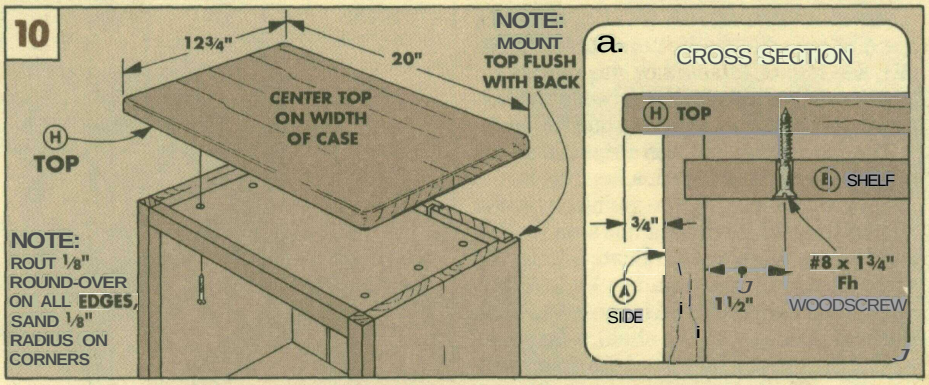

CUPBOARD DOOR

The door of the cupboard is a frame and panel unit with an option — you can build solid wood panels or punch tin panels and mount them in the frame, see photos on page 6.

DOOR FRAME. I built the door frame using lap joints at the corners, see Fig. 11. These are strong, yet easy to cut.

To make the door frame, start by ripping two door stiles (I) and two door rails (J) to finished width, see Fig. 11.

Then, to determine the length of the pieces, measure between the facing strips and subtract ⅛" to allow for a 1/16" gap all around the door. Then cut the frame pieces to finished length, see Fig. 11.

END LAPS. To join the frame pieces, lap joints are cut on the ends of each piece. Cut the end laps *half* the thickness of each of the mating pieces, see Fig. 11a.

After the lap joints are cut, the frame can be clamped up with glue in all the joints.

CORNER PINS. Next, I drilled two holes through each corner of the frame for a pair of decorative dowel pins, see Fig. 11a. Then glue the pins into the holes and trim them flush with the frame.

RABBET. When the frame is assembled, rout a rabbet around the perimeter of the door opening in the *back* side, see Figs. 12 and 12a. This creates a lip for the door panels, either solid wood or punched tin.

When the rabbet is complete, square up the corners with a chisel, see Fig. 12b.

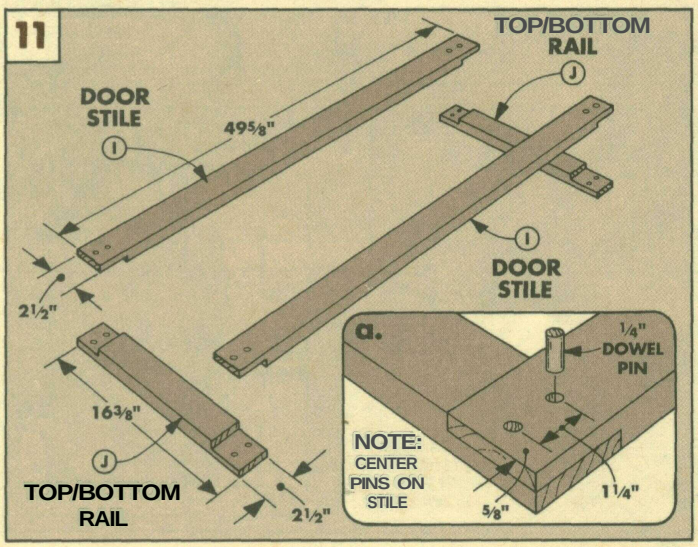

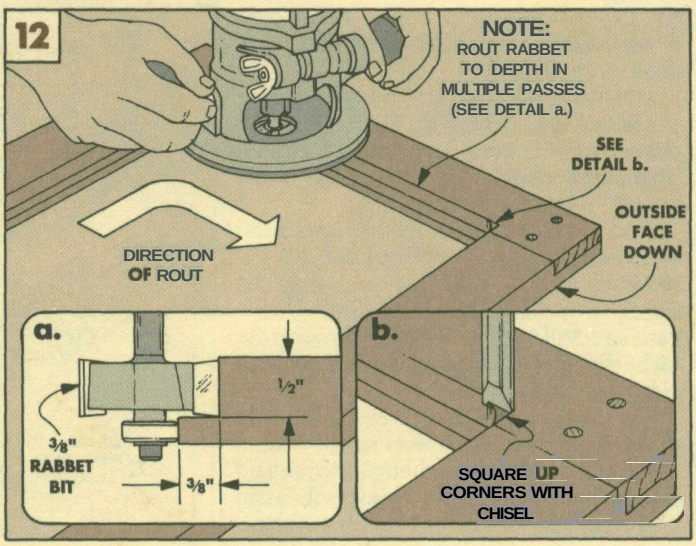

When the outside frame of the door is complete, the **dividers** (K) can be built. The purpose of the dividers is to separate — and support — the four door panels.

CENTER DIVIDERS. Start by ripping three blanks to finished width, see Fig. 13. Then cut them to length to fit between the rabbets in the frame.

TONGUES. The dividers are held in place by a short tongue on each end, see Fig. 13. I cut the rabbets that create these tongues using a dado blade, see Fig. 14.

EDGE RABBETS. Now the dividers can fit flush down into the frame. Then, in order to completely support the panels, two more rabbets are needed on the edges of the dividers, see Fig. 13.

To cut these rabbets, I again used the dado blade in the table saw, see Fig. 15. Cut these with the **front** of the divider facing *up*.

PANEL & KEEPER STRIPS. Once all three dividers are glued in place, work can begin on the panels. And that means it's finally time to make a decision — **do** you want solid wood panels or punched tin panels? (For sources of tin panels, see page 31.)

To make the wood **panels (L)**, cut four blanks to size from ¾"-**thick** stock, see Fig. 13. **Note: Cut the panels** ⅛" *smaller* **than** the openings to allow for a 1/16" gap all around.

Then I used the table saw to create a **"raised"** field on the face of the panels and a rabbet on the back. To cut a raised panel using the table saw, **see** Shop Notes, page 17.

The panels — wood or tin — are held in place by small quarter-round **keeper strips** (M), see Figs. 13a and 13b. Refer to Shop Notes on page 16 for information on making these keeper strips.

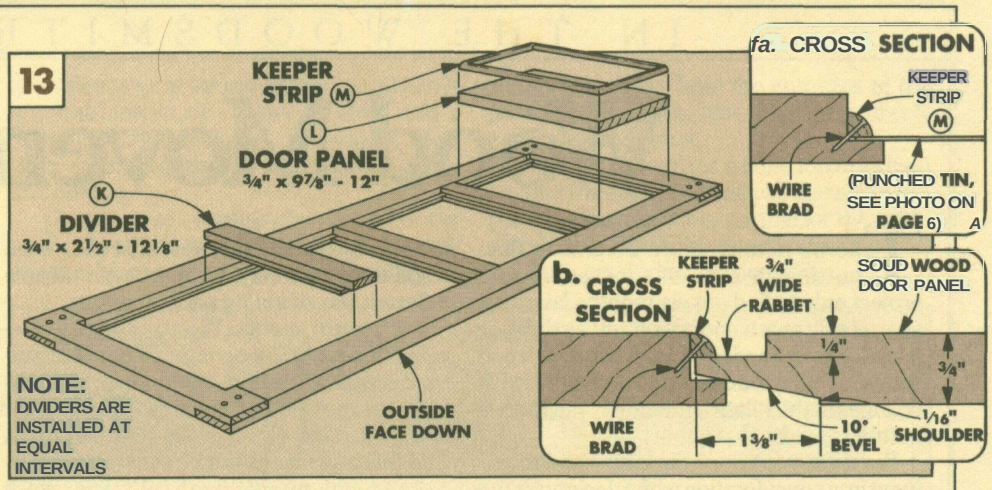

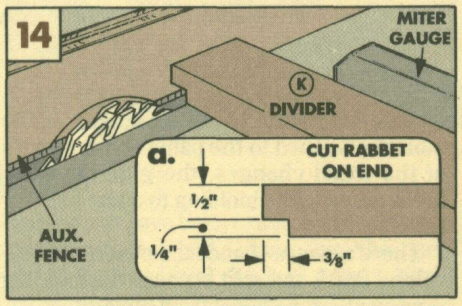

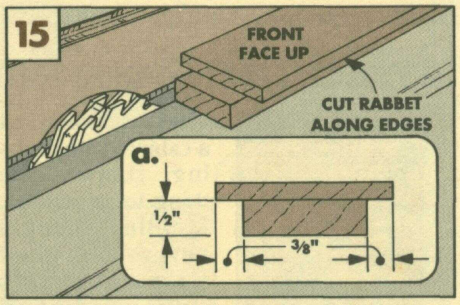

HINGE MORTISES. When the panels have been installed in the door, the door can be attached to the case. I used three hinges and cut a shallow mortise for each hinge in both the door stile and the facing strip, see Figs. **16, 17a,** and the Exploded View on page 7.

DOOR KNOB. After the door was attached to the case, I built **a** knob and latch assembly to open and close the door. To do this, start by drilling a hole through the door stile, see Fig. **16.** Then drill **a hole** in the wooden knob to accept a short length of dowel.

A short **"flipper"** fits in a slot on the end of the dowel, see Fig. 19. Then, **when the** knob on the front is turned, the flipper inside will catch the facing strip and prevent the door from swinging open, see Fig. 20.

FINISH & **FILL.** Now the cupboard can be stained and finished. Then, all that's left is to find someone to fill it with homemade jelly.

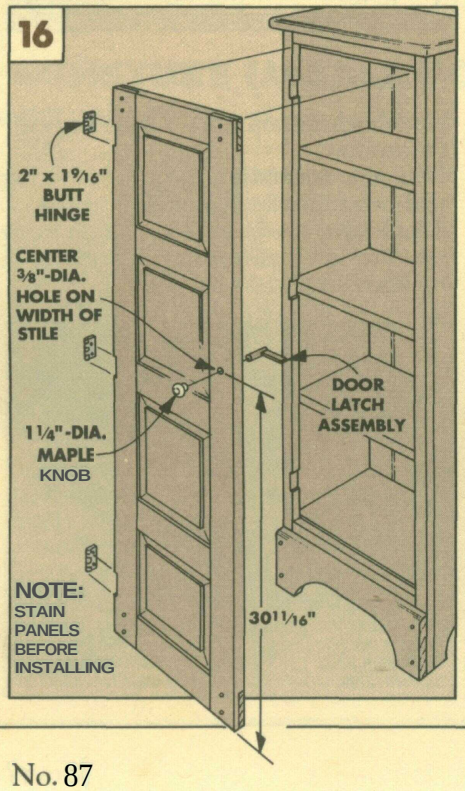

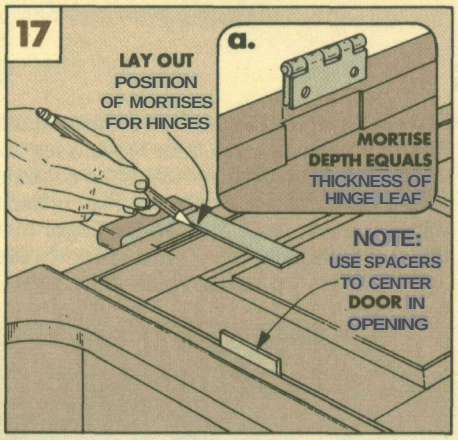

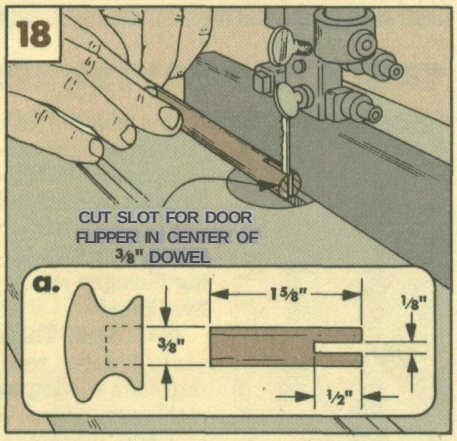

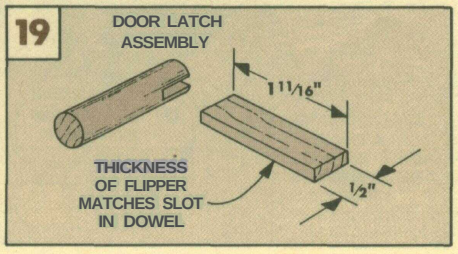

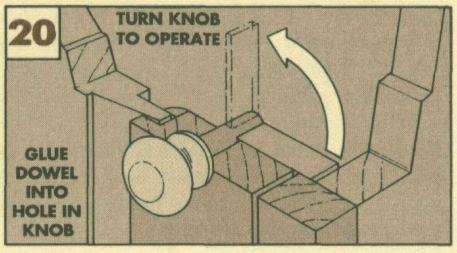

Wood Movement

There's nothing more frustrating than putting in a lot of time building a project only to find out six months later that a panel split apart, doors won't close right, or joints have opened up. It's all because wood "moves." It expands and contracts with changes in the relative humidity, and there's nothing you can do to stop it.

But what you *can* do is take wood movement into consideration when designing and building a project. This might mean special joinery. Or certain hardware that allows the wood to move freely. It might even mean a different way of gluing parts together.

WHY WOOD MOVES. Wood moves because it acts like a sponge. When the surrounding air is damp, wood absorbs moisture from the air and expands. When the air is dry, it releases moisture and contracts. And this movement can be considerable.

As a rough rule of thumb, a 12"-wide piece of hardwood can expand or contract as much as ⅛" (or about 1%) across its width. (It moves very little over its length.)

So with the seasonal changes in humidity, furniture is taking in and releasing moisture all the time. If a project isn't designed to handle this, then you're just asking for trouble down the road.

Fortunately, there are a number of things you can "design into" a project to allow for this movement. In this article we're showing some of the designs we've used in the past.

ATTACHING MOLDING

When trimming out a cabinet with molding, there's one thing to remember. Molding should never be *glued* across the grain of a solid wood panel (such as the top of this pie safe), see Fig. 1. Note: This doesn't apply if the panel is built from plywood. Plywood is a very stable material — it expands and contracts very little with the changes in humidity.

CROSS GRAIN GLUING. The problem here is that a solid panel can expand and contract quite a bit across its width as it takes in and lets off moisture. But the strip of molding will change very little along its length. If the molding is glued to the panel and the width of the panel changes, the glue joint can break causing the molding to come loose or fall off.

There's even a chance the panel could develop a crack and split because the molding is preventing the panel from moving.

PIE SAFE. On the pie safe, I didn't glue the molding to the solid top at all. That would have prevented the top from expanding and contracting. Instead, I pushed the molding up tight against the top, and nailed it (using wire brads) to the frame that makes up the side of the pie safe.

The frame stiles are narrow enough that they will expand and contract very little. And if they do, there's enough "give" in the brads to allow for some movement, but the molding will still be held in place.

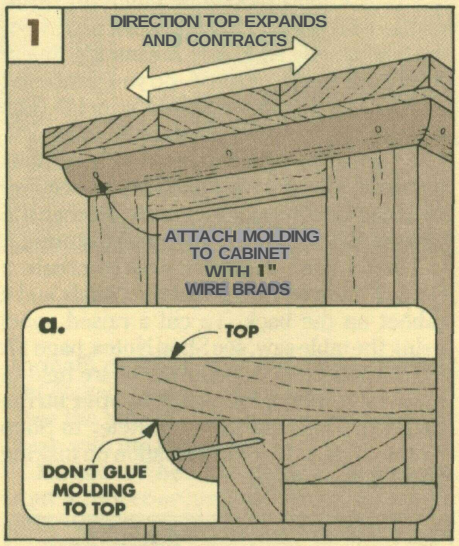

TABLE TOP FASTENERS

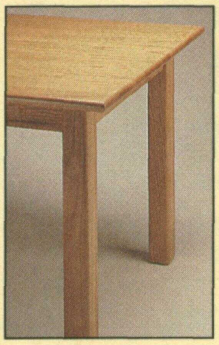

A wide table top (like the top to this contemporary oak table) can expand and contract up to ⅜" across its width during changes in relative humidity.

TWO UNITS. Think of a table as two separate units — a leg assembly and a top. If the top were fastened so it couldn't expand or contract, serious damage would result. If the top expanded, it could push the leg assembly apart. Or if it contracted, it could crack and split.

When building a table, the top must be allowed to move freely with the changes in humidity. But it also must be fastened in such a way that the top is held down tight against the legs and aprons.

TABLE TOP FASTENERS. There are a number of ways to fasten a table top to a leg assembly. One method I've used is to cut little L-shaped blocks of wood, see Fig. 1. Each block is like a small hand with a finger that fits into a groove cut on the inside of the apron. As the top expands and contracts, the block holds the top down, but the top is still free to move.

Another method is to use a metal fastener that's made just for this purpose, see Fig. 2. These fasteners (available through many woodworking mail order catalogs) pivot back and forth as the top moves.

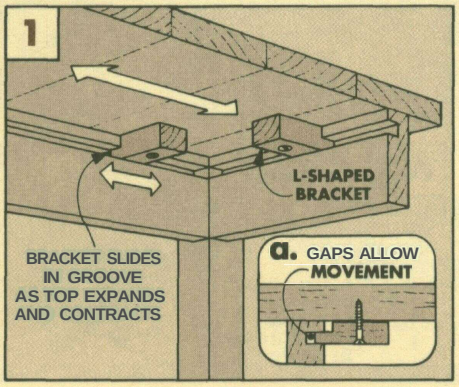

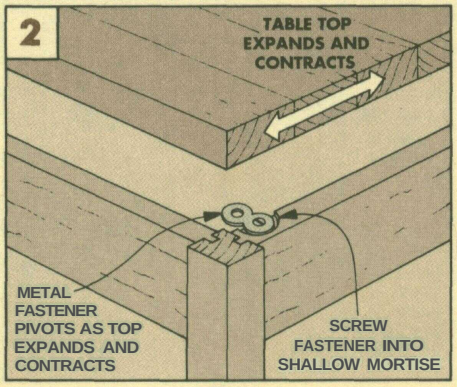

MOUNTING END CAPS

One way to cover end grain on a large solid wood panel is with an end cap (sometimes called a breadboard end). But an end cap that's not attached properly can cause the panel to crack or separate. That's because the panel is moving more across its width than the end cap is along its length.

The trick to avoiding these problems is to make sure the end caps are attached in such a way that they allow the panel to freely expand and contract.

ALLOWING MOVEMENT. Typical uses for an end cap would be on a wide panel used for a cutting board or a trestle table. One of the techniques I use for mounting an end cap is a combination of screws in slots and a tongue and groove joint, see Fig. 1. (The slots are evenly spaced along the length of the tongue.)

Then instead of using glue to secure the end caps to the ends of the panel, I screw them in place with woodscrews through the slots. The screws hold the end caps to the panel, and the slots allow the panel to freely expand and contract.

Note: It's normal for a table top to extend beyond the ends of an end cap during humid periods. And it's just as normal for the top to shrink back until the end cap extends beyond the top during dry periods.

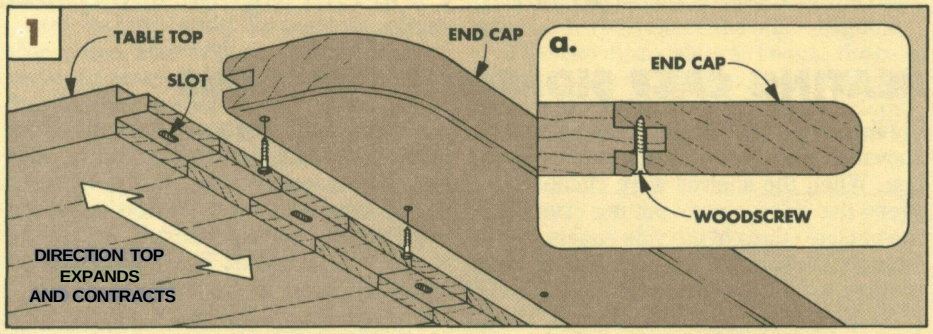

WRAPPING AROUND LEGS

How do you fit a solid wood panel between the fixed parts of a project and still allow it to expand and contract with the seasonal changes in relative humidity?

On a recent book stand project, I installed the lower glued-up shelf between the four fixed legs. The shelf actually appeared as if it wrapped around each leg, see photo.

One way to make the shelf fit around the legs would have been to notch the corners of the panel. But had I done this, the panel could have pushed the legs apart when it expanded across its width.

To avoid this, I faked the notches. The trick is to cut the shelf *short* and then attach end caps onto the solid panel. These end caps fit *between* the legs, see Fig. 1.

This way, when the panel expands across its width, it's able to clear the front and back openings between the legs. And since the end caps expand and contract very little along their length, they won't push out the legs. (Note: Glue the end caps to the shelf *only* at the center. Then the shelf can expand both ways from the center.)

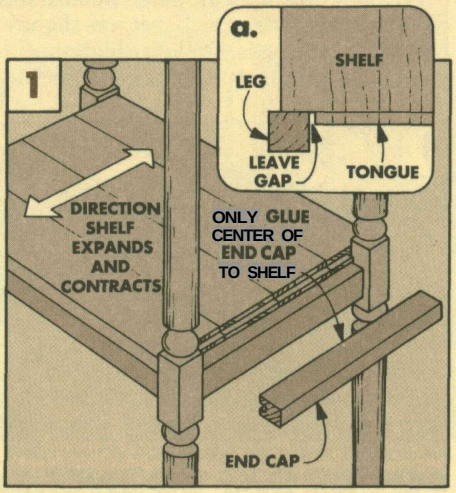

MOISTURE IMBALANCE

The air inside a lidded compartment (such as the inside of a blanket or hope chest) usually contains a different amount of moisture than the air outside the compartment.

The relative humidity outside the compartment is almost always changing. While the relative humidity inside the compartment changes very little and remains more stable.

MOISTURE IMBALANCE. This can cause a problem. When the relative humidity is low (for example, in a heated house during the winter), the wood cells on the outside face of the lid start to dry out and shrink. Since the air inside the sealed compartment contains more moisture, the cells on the inside face won't shrink.

If the moisture imbalance is allowed to continue, the lid will cup, see Fig. 1. And if it remains cupped for a long period of time (during a long, dry winter) it's unlikely that it will ever completely return to normal.

CLEATS. One way to avoid this is to open the lid every few days. But for most of us, that's not very practical. Another way is to design the chest so air can flow through it. But that defeats the purpose of trying to keep the moths out.

The best method I've found to prevent cupping is to screw (don't glue) a pair of cleats across the *inside* face of the lid, see Fig. 1. This way when the lid tries to cup, the cleats hold it flat.

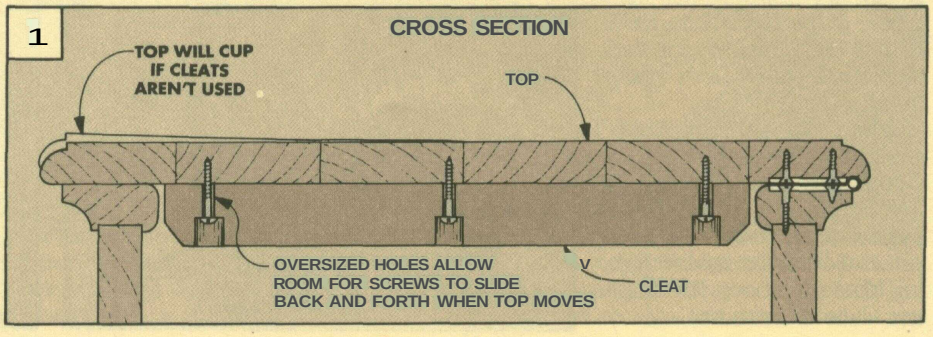

Clamping Tips

Adding another clamp isn't the only way to get a straight, square assembly. Sometimes you can improvise to find a solution.

SEATING CASE SIDES WITH WEDGES

• While dry assembling the Jelly Cupboard shown on page 6, I ran into a familiar problem. When the shelves were clamped between the sides, simply putting clamps on the outside edges of the side panels wasn't enough. The center of the panels cupped out — they wouldn't pull in tight against the shelves, see Fig. 1.

TAPERED BLOCK. In the past, I would have corrected this with a block that was slightly tapered on both ends, forming a high spot in the middle. When clamped across the side panels, this high spot would force the center of the panel against the shelf. But recently our shop manager, Steve Curtis, came up with another method that offers more control. He uses opposing wedges.

OPPOSING WEDGES. These wedges work against a clamping bar that "straddles" the sides, see Fig. 2. This bar is simply a 2x4 block with ½"-thick spacers glued on each end. Using double-sided carpet tape, Steve sticks the spacers to the side of the cabinet. Then he clamps the assembly together.

Next, to force the center of the side panel tight against the shelf, Steve taps opposing wedges between the clamping bar and the sides until the shelf fs completely seated in the dado, see Fig. 2a.

ADVANTAGES. These wedges offer two advantages. First, the pressure can be concentrated at any point (or points). If a section is really stubborn, adding more wedges can force it in. Also, by using two opposing wedges instead of just one, the pressure is centered directly on the dado.

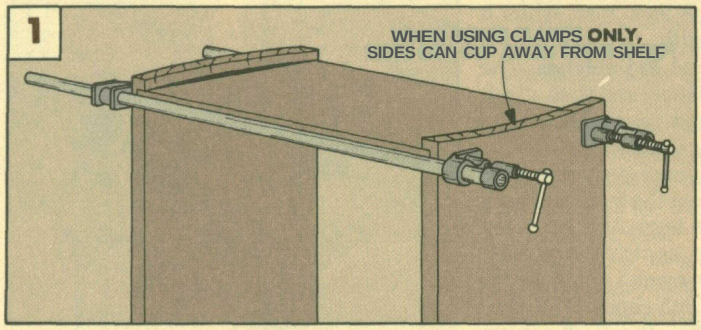

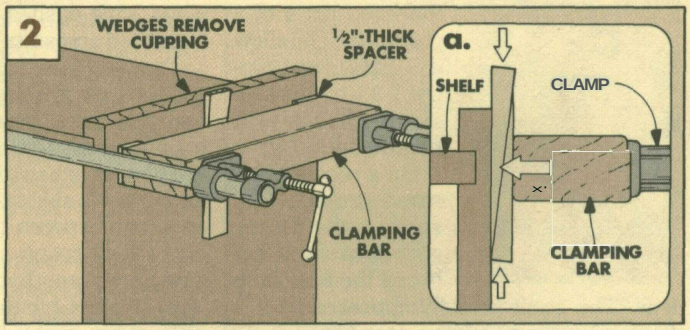

SQUARING CORNERS: TWO METHOPS

• A typical method to square up a case is to readjust or add more clamps. This can be tricky if you already have a lot of clamps on the assembly. Here are a couple of squaring jigs that won't get in the way and can be used *with* your clamps. They don't apply pressure to the joint itself — the clamps still do this. Instead, they hold the corner at 90°.

FRAMING SQUARE. One method to square up a corner is to use a framing square as a form, see Fig. 1. The square is clamped to the inside corner of the case. Then, as the clamps are tightened, the workpieces are pulled flush against the square.

When using this method, I don't clamp the framing square directly to the corner of the case. The square is too thin, and its edges might dent the workpieces. So I cut a couple of clamping blocks to fit over the tongue and blade of the square.

These blocks are easy enough to make. Just cut a kerf in each block to match the height of the tongue and blade of the framing square. This kerf should fit tight around the framing square so the block stays in place.

CORNER SUPPORT BOARD. Another way to square up a corner is to use a corner support board, see Fig. 2. This board will keep the pieces square during clamping — freeing your hands and preventing the clamps from racking the corner.

To make this corner support, cut two dadoes 90° to each other, using the miter gauge set at 45°, see Fig. 2a. (The dadoes' width must equal the thickness of the stock.) Space the dadoes so they don't cross on the support board. This prevents the board from being glued to the workpieces.

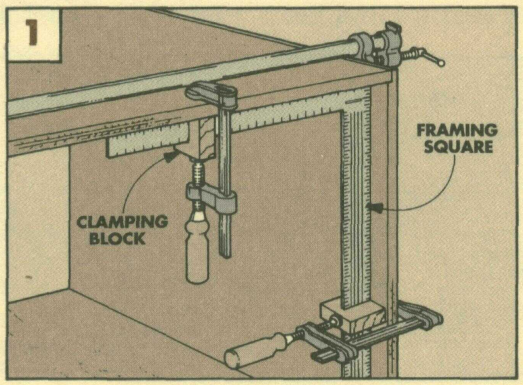

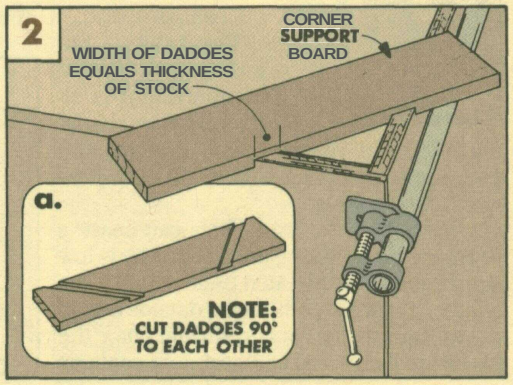

CHECKING DIAGONALS

• How do you check to see if the inside of a cabinet is square? One common method is to hold a square against the corners. But this isn't always completely accurate. Try squares can be too small. And if the sides of the cabinet are slightly bowed, a framing square won't give an accurate reading.

A better method is to measure the distances between the opposite corners — if they're the same, then the cabinet is square. You could use a tape measure, but the little tab on the end and the housing, itself, make it impossible to get the tape into the corners.

ADJUSTABLE GAUGE. I find an adjustable gauge works much better — the ends are beveled so it fits right into the corners being checked, see Fig. 1. Plus, with this gauge you compare the diagonals without having to worry about the actual measurements.

The gauge works like the adjustable legs on a tripod. It has a stationary arm and a sliding arm, see Fig. 2. Together, the arms can extend from 29" to 42". And the gauge can be locked at any length.

MAKING THE GAUGE. To build the adjustable gauge, start with two pieces of scrap and cut a bevel on one end of each arm so they'll fit into the corners of the case. Next, rout a slot in the sliding arm and drill two holes in the stationary arm.

To keep the gauge aligned, glue a dowel into the hole closest to the end of the stationary arm. Then connect the arms with a bolt, washer, and wing nut. (Note: The bevels should be on opposite sides so the gauge will fit into the corners of a rectangle.)

USING THE GAUGE. To use the adjustable squaring gauge, lock the arms so they fit between the opposite corners of the case, see Fig. 1. Then check the other diagonal.

If the two diagonals aren't equal, the case is out of square. Pull the corners of the long diagonal closer together and reclamp. When the gauge fits equally across both diagonals, it's square.

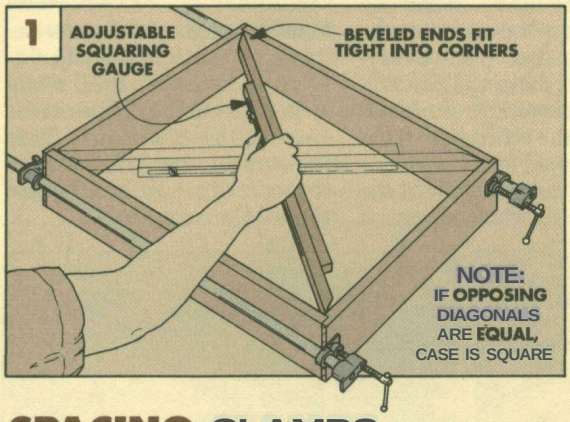

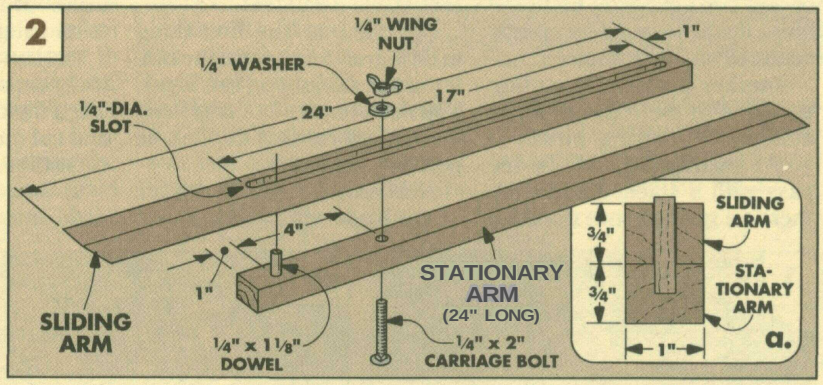

SPACING CLAMPS

• When edge-gluing boards into a panel, how far apart should you space the clamps? Ask this question to a number of woodworkers, and you'll probably get different answers. But many of the answers will overlook one fact — the width of the boards affects the spacing of the clamps.

BOARD FLEX. The important thing to consider here is that boards will flex across their width. And the powerful pressure of a clamp can easily bend a board.

BOARD WIDTH. The narrower a board is, the more it's going to bend and the more the clamps are going to concentrate the pressure only where they're positioned. This can create an uneven glue line and can weaken the panel. To correct this, you have to add more clamps, spacing them closer together.

On the other hand, wider boards are more rigid — they won't bend as easily. The clamping pressure is distributed equally along the full length of the panel. So there can be more distance between clamps.

Okay, but what does all this mean?

When assembling a panel, 3"-wide boards require more clamps (spaced closer together) than 5"-wide boards — just to get the same, consistent pressure.

SPACER BOARD. What if you don't have enough clamps to glue up a large panel? Then just add a wider spacer board between the clamps and the panel, see photos below. The wider spacers distribute the pressure more evenly across the narrower boards, so you can do the same job with fewer clamps.

In fact, using a couple of wide boards as spacers is a good idea anyway — even if you do have enough clamps. The spacers will ensure that the clamping pressure is being spread out evenly along the panel. And they will also protect the edges of the panel from the crushing force of the clamp heads.

SHORT ON CLAMPS? When clamping boards into a panel, you may not have enough clamps. They must be close enough to pull the joints tight — otherwise the glue lines will be weak.

ADD A SPACER. Adding wider spacer boards distributes the pressure more evenly between the clamps. So you can spread the clamps farther apart and still get strong, tight joints.

Shop Notes

CUTTING A CENTERED DADO

• There are a number of methods for cutting a dado in the center of a workpiece. One way is to lay out the dado on the workpiece, then cut up to the marks. But if the layout is off just a little, or you don't cut right up to the lines, the dado won't be exactly centered on the workpiece.

Another problem is cutting the dado to the exact width to accept the mating piece. If you're cutting the dado in one pass with a stacked dado set, there's a good chance the dado won't be the right width.

The technique I use doesn't require a precise layout and it gives me perfect fitting dadoes every time — and it works with either a single saw blade or a narrow, stacked dado set.

CENTERLINE. The first thing to do is **draw a** line down the center of the workpiece, see Fig. 1. You don't have to be fussy here. It's not critical that the line be perfectly centered.

Next, position the workpiece so the blade will cut just to one side of the **centerline**, see Fig. 1.

Now, lock down the rip fence against the end of the workpiece to act as a stop. Safety Note: As **long as you aren't cutting a workpiece** into two pieces, it's okay to use both the rip fence and the miter gauge at the same time.

CUTTING DADO. With everything set up, make the first cut. Then flip the workpiece around and cut on the other side of the centerline, see Fig. 2.

To increase the width of the dado, move the rip fence over a little, see Fig. 3. Then remove additional waste following the same procedure as before.

Test fit the dado between setups, and stop cutting once the dado is the correct width. And remember to remove waste from *both* sides of the centerline to keep the dado centered.

Note: I used this same method to cut the dadoes in the ends of the Silverware Tray (shown on page 22) — even though the end pieces are shaped like a **trapezoid.**

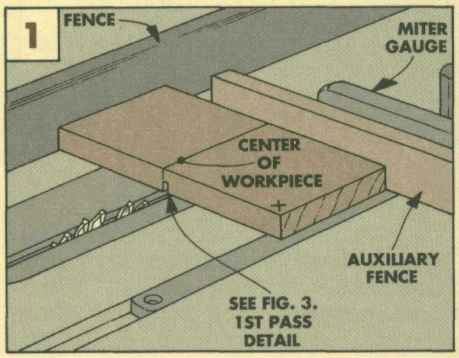

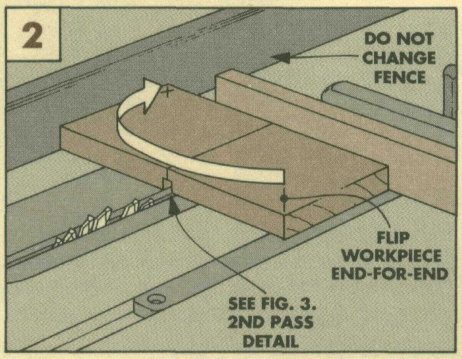

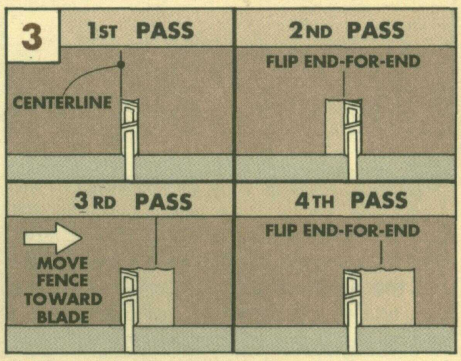

MAKING QUARTER-ROUND MOLDING

■ The safest way to make molding is to start with an oversize blank. Then once the profile is routed, the molding can be trimmed from the blank. Trying to rout the edge of a thin strip of wood is just asking for trouble.

PROFILE. To make the **quarter-round** keeper strips for the Jelly Cupboard (shown on page **6)**, the first thing to do is round over two edges of an oversize blank, see Fig. 1.

CUT KERFS. After the edges are routed, stand the blank on edge against the table saw rip fence. Then, to establish one edge of each quarter-round, cut kerfs on the table saw, see Fig. 2.

TRIM OFF STRIPS. The safest way to **trim** off the strips **is** on the **"waste"** (outside) edge of the blank. **But** I didn't **cut** all the way through the workpiece.

Instead, I adjusted the height of the blade to trim off the quarter-round strip, see Fig. 3. This way, the blank remains **the** same width and there will always be a shoulder to rub against the rip fence. So the fence won't have to be moved between cuts.

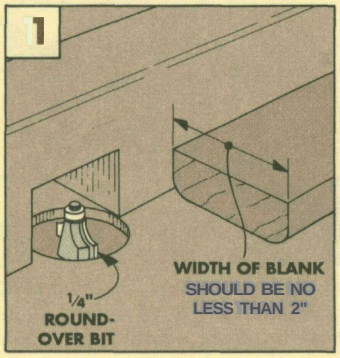

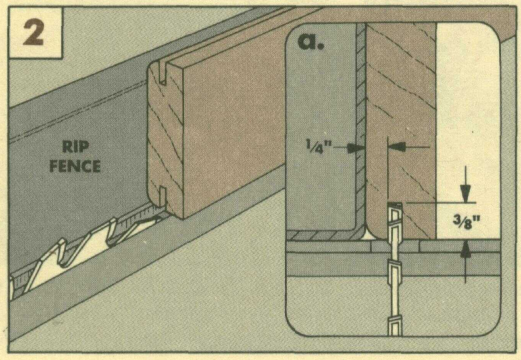

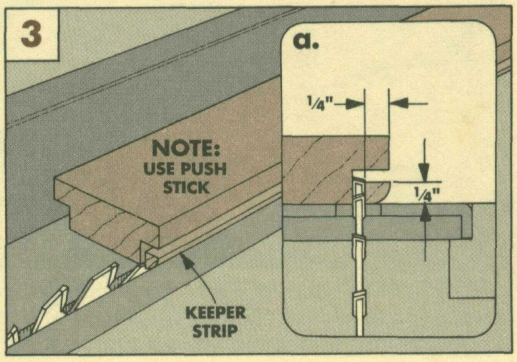

FINISHING TIP

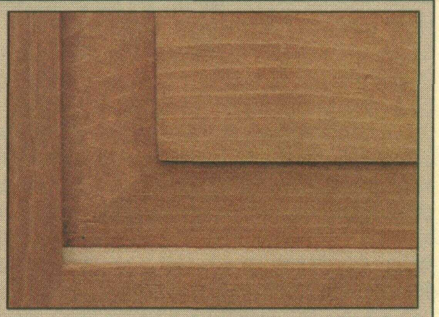

If a raised panel shrinks, an unfinished border may appear around the edge. To prevent this, finish the panel before mounting it in the frame.

RAISED PANELS ON THE TABLE SAW

• One way to cut raised panels (such as shown on the Jelly Cupboard on page 6) is to use the table saw. But there are a couple of things I do to make the job go easier and get smooth, clean bevels and shoulders.

TABLE SAW SET-UP. To begin, tilt the saw blade (10° for the Jelly Cupboard) and raise the blade to the correct height (1⅜" in this case), see Fig. 1.

Once the saw blade is adjusted, I actually make the cut in two passes — moving the rip fence slightly between passes.

The first pass removes most of the waste. Then, to clean up any burn marks or blade swirls, I make a second "skim" cut. This also creates the 1/16"-wide shoulder on the profile. Note: Before moving the rip fence closer to the blade for the second pass, cut the bevels on *all* the edges of *all* your panels.

Shop Tip: When cutting the profile, cut across the end grain edges first. Then if you get chipout near the tail end of the profile, it will be removed as soon as the profile is cut on the face grain edges.

SANDING. After all the raised panels have been cut, the last step is to sand the bevels. But there's also another little area that needs some attention. Since the blade was tilted, the 1/16" shoulder will be slightly undercut. To square this up, I made a sanding block that has a bevel cut on one edge, see Fig. 2.

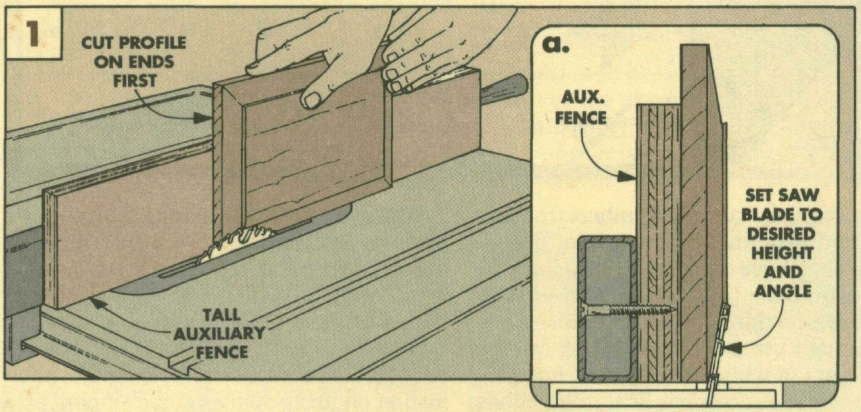

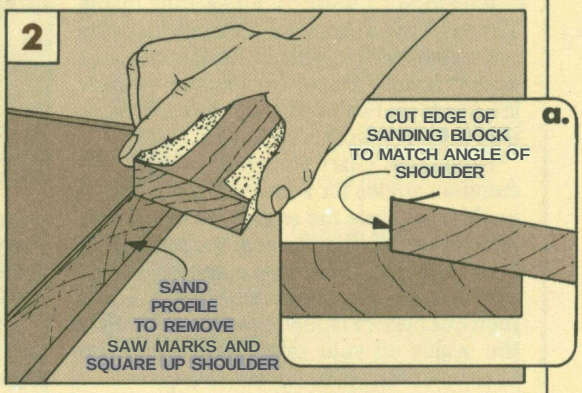

ROUTING CUSTOM-FIT DADOES

• When cutting a dado in a large panel, I like to use a hand-held router. It's easier moving the router over the workpiece than it is wrestling with a large panel on my table saw or router table.

But just like any other project that has a shelf resting in a dado, the dadoes in the Jelly Cupboard sides (on page 6) *should* be custom-fit to the thickness of the shelves. (Lumber is rarely the exact same thickness as the diameter of a router bit.) To cut the dadoes, I use a smaller diameter bit — making two passes.

One way to do this is to set up the guide fence twice. Once for the first pass, and then a second time to sneak up on the final width of the dado. But moving the fence twice is a hassle.

Instead, I set up the fence once and use a spacer strip that determines the exact finished width of the dado. The width of the strip, plus the diameter of your router bit, should equal the width of the dado, see Fig. la.

After the first pass, remove the spacer. Then make the second pass to complete the dado.

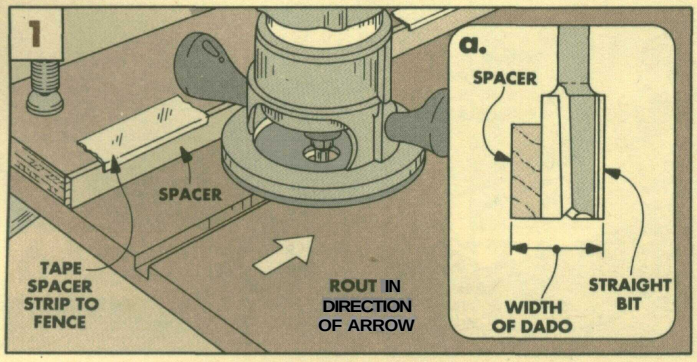

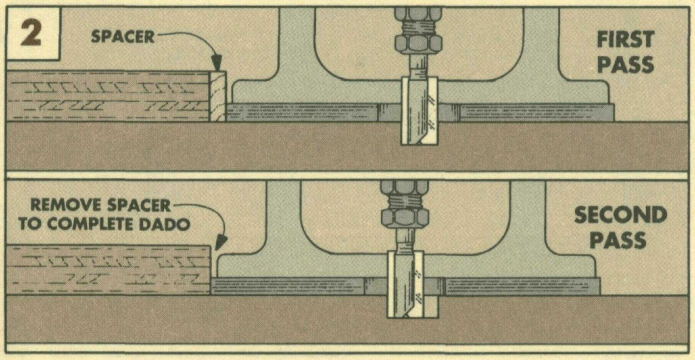

Compound Miters

Hours of frustration and a box full of kindling. That's what many woodworkers get when trying to cut compound miter joints. And it's no wonder. A compound miter is easy to understand when you see one in an assembled box. But figuring out how to cut it correctly can be quite a challenge.

So how do you make a miter joint "compound?" It's fairly simple. When cutting a compound miter on the table saw, there are *two* different settings to make. The miter gauge is angled *and* the saw blade is tilted. And the settings for the miter gauge and saw blade have to be right on (that's the tricky part). But once the saw is all set up, it takes just one pass over the blade to cut each half of the joint (that's the easy part).

REFERENCE CHART. Before setting up the saw, you have to know what angles to set the miter gauge and saw blade. Fortunately, this doesn't involve a lot of calculations — there are charts that show the numbers and eliminate the guesswork, see chart at right.

Note: The chart shown here lists four common angles for a four-sided box. For a booklet that lists the angles for boxes with almost any number of sides, see page 31.

So, can I just take these numbers and set up the miter gauge and saw blade — and then cut perfect compound miters? Only if the scales on your miter gauge and saw blade are perfectly accurate. Most aren't

ACCURATE ANGLES. The way I do it is to ignore the angle scales on the saw and miter gauge. Instead, I take the numbers from the chart and make a template out of posterboard. Then I use the template to adjust the angle of the miter gauge and tilt of the blade.

The reason this procedure is more accurate is that I use a protractor to lay out the angles on the template. (Even an inexpensive plastic protractor has finer graduations than the coarse scales on my saw.)

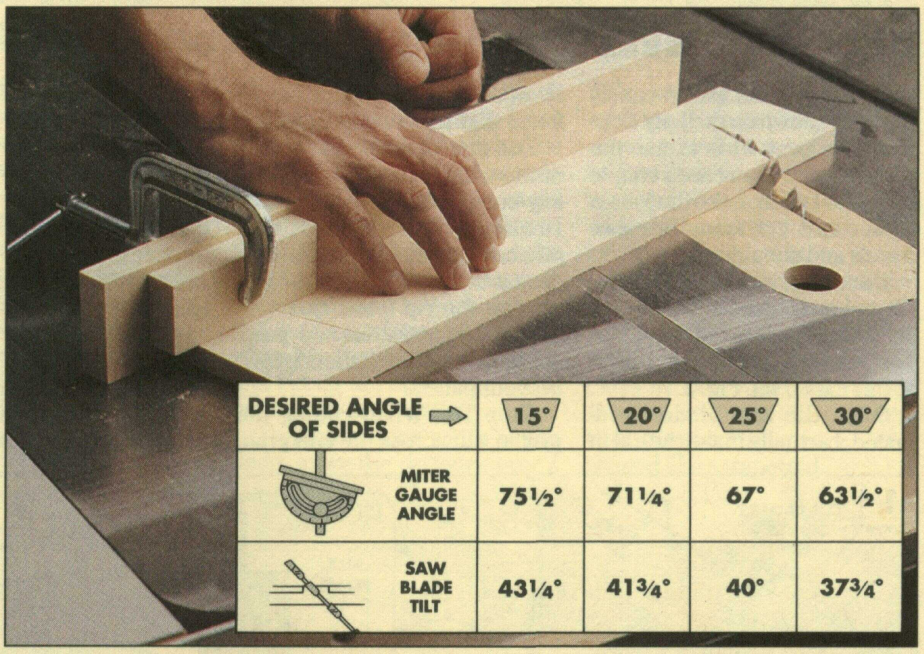

DESIRED ANGLE OF SIDES	15°	20°	25°	30°
MITER GAUGE ANGLE	75½°	71¼°	67°	63½°
SAW BLADE TILT	43¼°	41¾°	40°	37¾°

TEST BOX. After the miter gauge and saw blade are set, making a box with compound miters is easy. But it helps to cut a test box first. Then you can make adjustments to produce a box with perfect compound miters.

SPLINES. Once the joints are cut, I like to reinforce the corners with splines. For information on using splines and clamping up a compound miter box, see pages 20 and 21.

TABLE SAW SETUP

A perfect compound miter comes from an accurate saw setup. But rather than "eyeball" the proper settings, I use a protractor from an art supply store. Then I make a template for setting up the saw.

POSTERBOARD TEMPLATE. To make the template, draw two angles on a stiff piece of posterboard, see Fig. 1. One angle is for the miter gauge setting and the other is for the saw blade setting. (Refer to the chart above for the necessary angles.) Then cut the angles off the ends of the posterboard.

SET MITER GAUGE. To set the miter gauge angle, place the gauge in the slot to the right of the blade, see Fig. 2. (If the blade on your saw tilts to the right, place it in the left slot.)

Now place the template against the miter gauge and adjust the angle until the template is flat against the blade, see Fig. 2.

SET BLADE TILT. To set the saw blade tilt, stand the template on edge and place the "blade" end of the template against the face of the saw blade, see Fig. 3. This "fine tunes" the angle for an accurate compound miter.

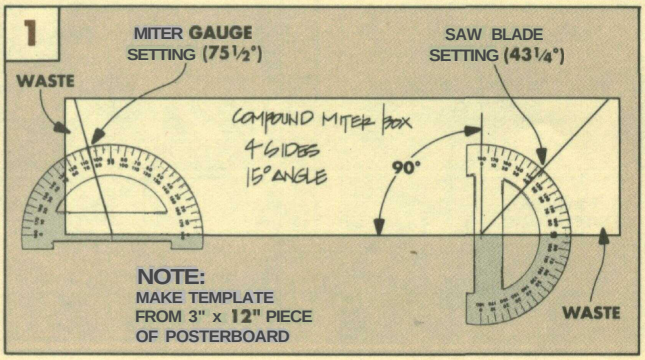

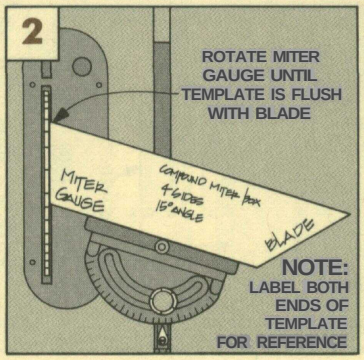

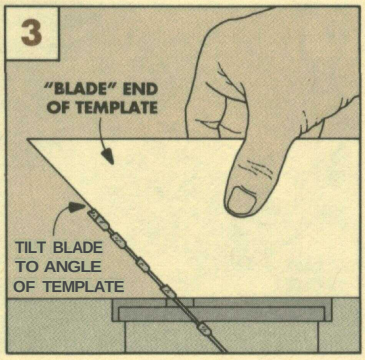

CUTTING COMPOUND MITERS

The procedure for making a box with compound miter joints is much the same as for any box. Basically, it's just measuring, marking, and cutting. But a box joined with compound miters has sides that are *angled*, so there can be some confusion when cutting the pieces. To prevent this, I follow a logical step-by-step procedure.

SAME WIDTH & THICKNESS. I start by cutting all four sides of the box to the same width and thickness. (The dimensions can vary from box to box, of course, but each box should start out with these two common dimensions.) And the easiest way to get all four sides the same width and thickness is to cut them from the same oversize blank, see Step 1 below.

LABEL THE SIDES. Next, lay out the pieces on the blank. When cutting all the angles for a box with compound miters, it's easy to get confused in the process. Which side faces up? Which edge goes against the miter gauge? If you place the workpiece the wrong way, you'll end up with a piece of compound-mitered scrap wood.

To eliminate the confusion, I mark the rough lengths of the four sides on the blank, see Step 1 below. Then I number the sides (1, 2, 3, and 4) to show where they will go in the assembled box.

Now label the top outside edge of each piece. This way you know you're on the right track if the labels are visible as you're cutting.

DRAW THE ANGLES. After labeling each piece, I go one step farther (just to be safe). Take the oversize blank with the marked side facing *up* and draw pencil marks to indicate the direction to angle the miters. (Use the template for this.) The exact location of these marks can be rough, but if you follow the marks, you'll know you're set up to cut the angles in the right direction.

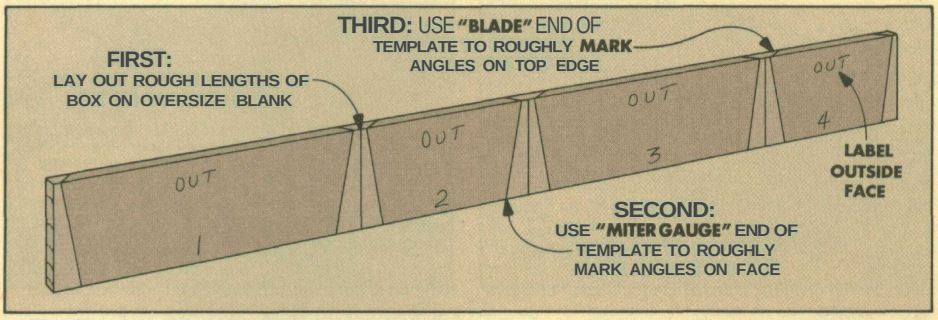

1 *Start making the box by laying out the four sides on an oversize blank. To minimize confusion, number each of the pieces. Also mark the top, outside edges. Now use the template (see Fig. 1 on the opposite page) to lay out the angles on the face and edge of each piece. Then rough cut the blank into four pieces with square ends.*

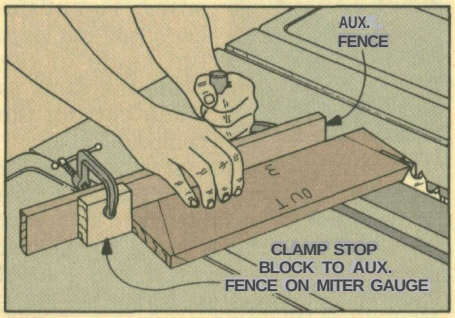

2 *Attach an auxiliary fence to the miter gauge, then adjust miter gauge and blade to the correct angle (see opposite page). Now cut off one end of each piece.*

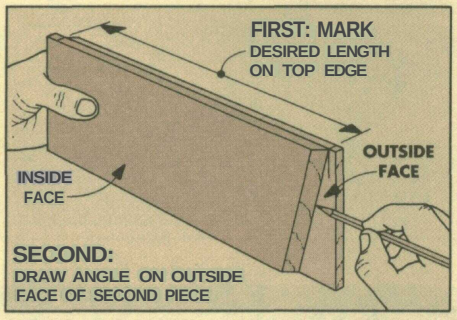

3 *Mark the desired length on the top edge of each piece. Then use the mitered end of another piece to transfer the angle onto the face for the second cut.*

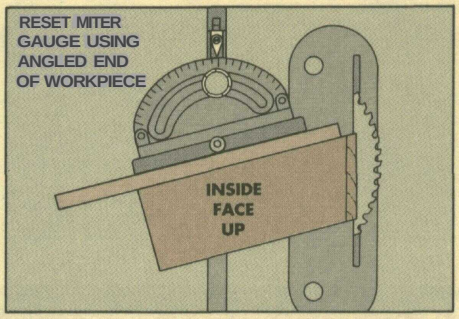

4 *For the second cut, the miter gauge must be set to the opposite angle. And for the most accurate set-up, use the angled end of one of the pieces as a set-up gauge.*

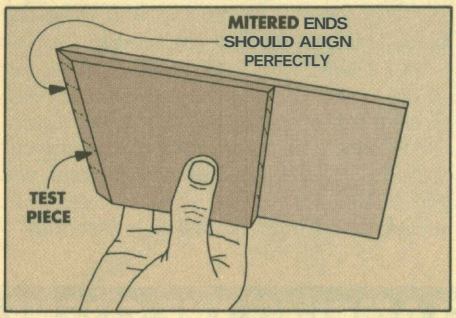

5 *Now make a test cut on a piece of scrap. Compare this miter to one of the first. If the miters don't match perfectly, readjust the miter gauge and try again.*

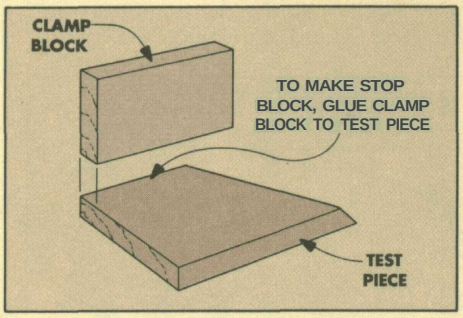

6 *When the miter gauge is set just right, glue a clamp block to the test piece. This can now be used as a stop block for cutting all the pieces to finished length.*

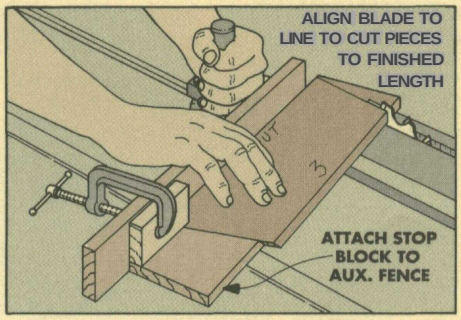

7 *Position the stop block on the miter gauge fence, then clamp it so the blade aligns to the pencil mark on the workpiece. Now make the second cut.*

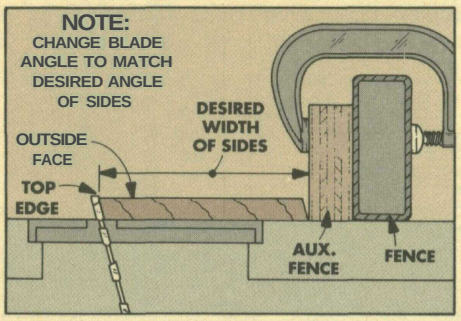

8 *To trim the bottom edge of each piece so the box sits flat, reset the angle of the blade to match the desired angle of the sides. To trim the top edge, flip the piece.*

COMPOUND MITERS

SPLINE JOINTS

Over the years I've built a number of boxes with compound miter joints. And I'm always experimenting with different methods to strengthen and assemble the corners. The simplest way is to glue the joint and reinforce it with finish nails.

A better way to join the corners is to use a spline that fits into saw kerfs cut into the mitered ends of each piece, see photo below. The spline helps strengthen the joint, but it also helps align the joint during assembly. (This is the way I reinforced the joints on the Silverware Tray shown on page 22.)

Another method of reinforcing a compound miter joint is to add splines across the glue joint, see opposite page. A "cross spline" also strengthens the joint, and it adds a decorative touch to the assembled box.

THROUGH SPLINES

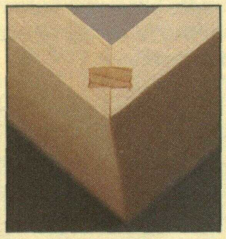

A through spline is the simplest spline joint for a compound miter. To cut the kerfs, you can leave the angle of the blade the same as when cutting the compound miters.

SUPPORT JIG. To set up for cutting the kerfs, the first thing to do is make a simple jig to support the workpiece as it's run over the saw blade. This is just a rectangular piece of ¾" scrap plywood with a dowel glued into a hole near one corner, see Fig. 1.

SETUP. To cut the kerfs, place the workpiece against the jig and position both against the rip fence, see Fig. 2. Note: Hold the angled end tight against the saw table.

Now adjust the fence until the blade is centered on the workpiece, and raise the blade to the desired height, see Fig. 2a.

CUT & FLIP. After cutting a kerf in one end of the workpiece, flip the piece end-for-end to cut a kerf on the opposite end, see Fig. 3.

SPLINES. The strongest splines are cut with the grain running across the joint, see Fig 4. Also, the splines should be cut to fit proud, then trimmed flush after assembly.

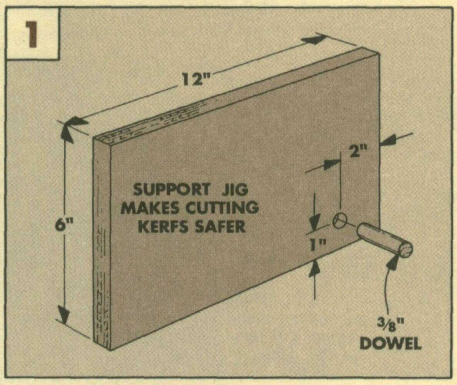

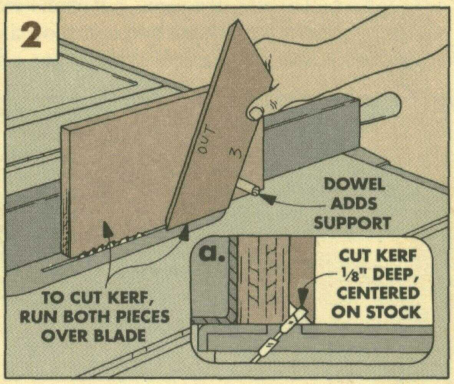

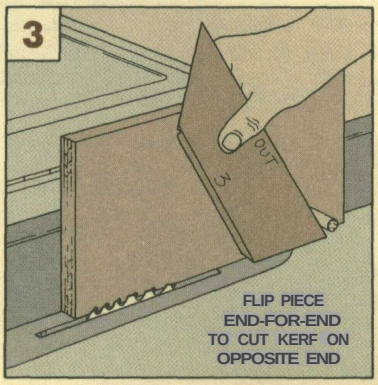

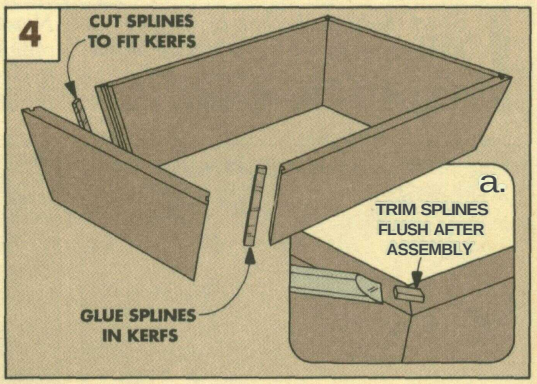

CLAMPING THE CORNERS

When assembling a box with compound miter joints, how do you tighten a clamp on each of the angled corners? The answer is simple — cut a pair of blocks to create a right angle at each corner.

To cut eight blocks, start with a piece of 2"-wide scrap four times as long as the height of the box. Rip the piece in half with the saw blade tilted to the same angle used for cutting the compound miters, see Fig. 1.

Now cut the pieces to the height of the box and attach them to the corners with double-sided carpet tape, see Fig. 2. To draw the corners tight while the glue dries, snug (but don't over-tighten) the clamps, see Fig. 3.

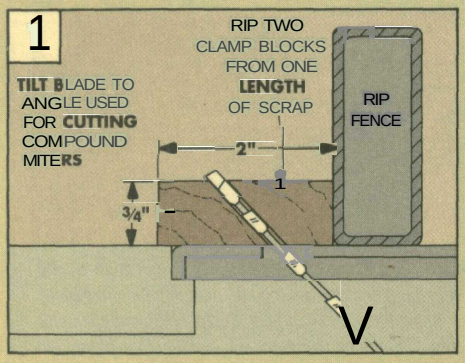

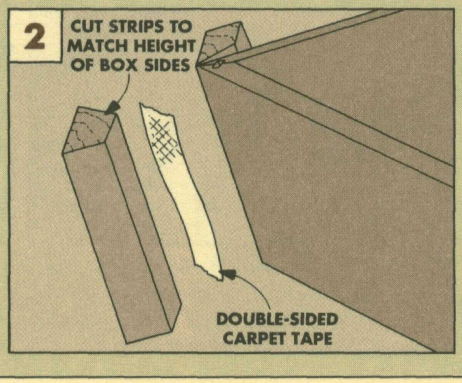

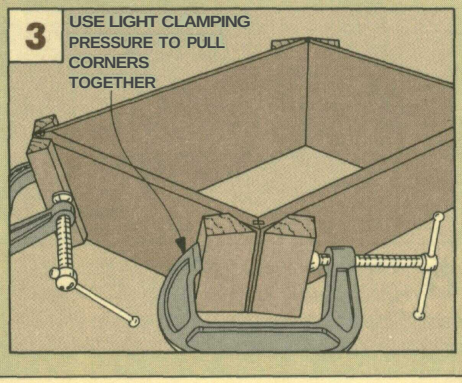

CROSS SPLINES

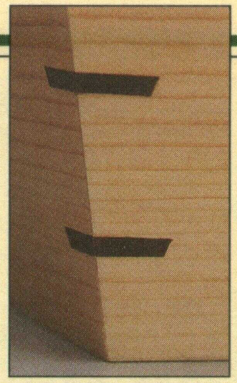

Here's a way to reinforce a compound miter joint and also add a touch of decoration. It's simply wood splines glued into kerfs cut across the corner, see photo at right.

To add a cross spline, the box must already be assembled. But cutting a kerf across the corner of a box with angled sides is almost impossible (and certainly dangerous) without some way to hold the box.

CARRIAGE JIG. So, to safely hold the box in the upright position, I built a simple jig. The jig is screwed to the table saw miter gauge and has a "trough" cut down the middle. The trough cradles the corner of the box and keeps it from rocking during the cut.

BUILDING THE JIG

To provide adequate support, the trough in the jig has to be deep enough. That's no problem. But it also has to be cut to the correct angle which, for a compound miter box, isn't exactly 90°. Fortunately, this is easy too. The saw blade is simply tilted to match the angle used for cutting the compound miters (43¼° for the Silverware Tray).

2x4 BLANK. To make the jig, I started with a short length of 2x4. To cut the trough down the middle, first adjust the height of the blade to leave ½" of stock at the bottom of the trough, see Fig. la. Then stand the 2x4 on edge and run it between the fence and the blade, flipping the piece between passes, see Fig. la. (Save the triangular cut-out.)

STOP BLOCK. To make a stop block for the box being cut, take the triangular piece of waste and drill a hole through it. Now the stop can be screwed into the trough of the jig at any location, see Figs. 1 and 4.

USING THE JIG

Getting the most out of this jig takes a little setup. First, attach the jig to the miter gauge like an auxiliary fence. Then, change the tilt of the saw blade to match the angle of the sides of the box (15° for the Silverware Tray). Now cut a kerf through the jig toward one end, see Fig. 3.

Note: Raise the blade so it cuts completely into — but not through — the jig. Now, follow the kerf up to the top of the jig and draw a pencil line across the top to indicate the center of the kerf, see Fig. 3. This will be used to position the box in the jig.

LAY OUT POSITION OF CUTS. The cross splines can be positioned anywhere on the corner of the box. But before actually cutting them, mark their location on one corner, see Fig. 2. Note: Extend these marks far enough from the corner so that you can see them when the box is resting in the jig, see Fig. 4.

CUT & ROTATE. Now the kerfs can be cut. To do this, first align one of the marks on the box to the reference mark on the jig. Then screw down the stop block in the trough of the jig to keep the box from sliding while it's cut.

Now hold the box firmly in the trough and cut a kerf across the first corner, see Fig. 3a. Then rotate the box (without moving the stop block) to cut a kerf on the other corners.

MOVE STOP BLOCK & CUT AGAIN. To cut the second set of kerfs in the marked locations, remove the stop block then reattach it when the second mark is aligned to the reference mark on the jig, see Fig. 4a.

SPLINES. After the kerfs have been cut on all the corners of the box, splines can be cut to fit the kerfs, see Fig. 5. To get the most interesting effect, cut the splines from a contrasting wood then glue them into the kerfs. Finally, the splines can be trimmed flush with the sides of the box.

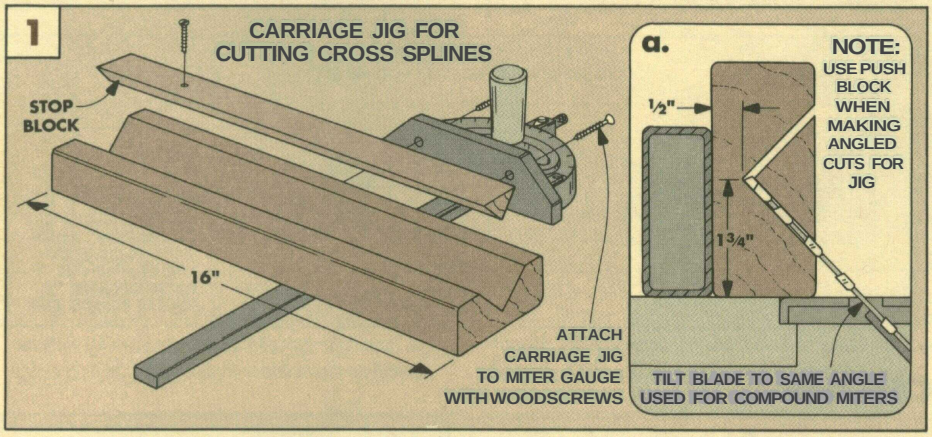

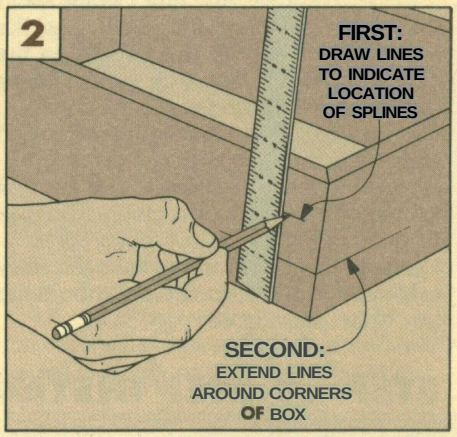

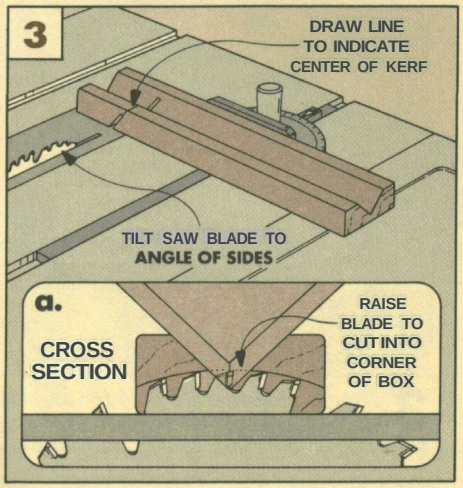

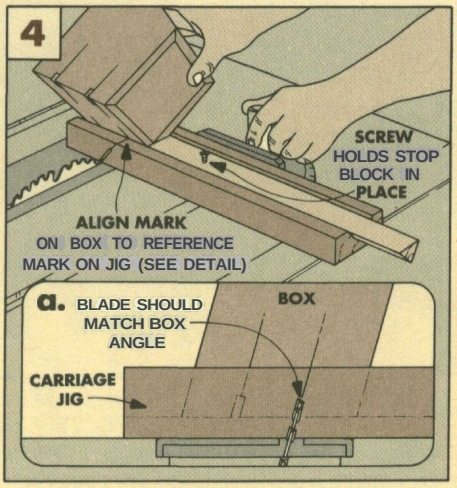

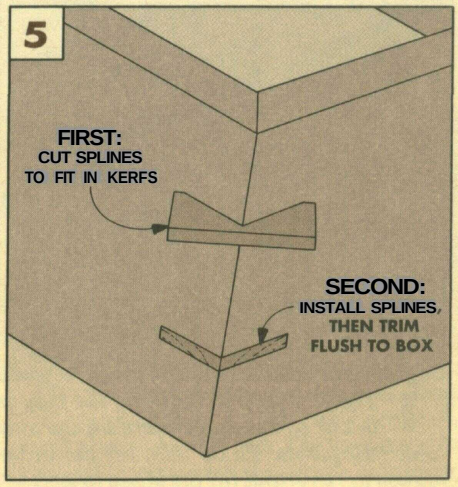

Silverware Tray

Antique silverware trays and tool totes have always intrigued me. Especially if they have angled sides. Angling the sides makes the tray more attractive, but it also creates some interesting problems — including the need for some special joinery.

COMPOUND MITERS. For this Silverware Tray, I used a compound miter joint. If you follow a logical procedure, it's not all that difficult to make. (We've included a step-by-step article on cutting this joint on page 18.)

SPLINES. To strengthen the miters, I've added splines to fit in kerfs cut into the corners. But you might notice I've taken a little different approach here. Instead of one spline, there's two, see the Exploded View on the next page.

The longer spline strengthens the joint, but I didn't cut it to fit tight across both kerfs. Instead, the spline is a little loose so it's easier to assemble the tray. Once it's assembled I added a shorter "stub" spline at the top to hide any gaps, see Step 4.

BEVELED EDGES. One other thing about the tray sides. They're beveled along the *bottom* edges only so they sit flat on the base. There's a reason why the top edges aren't beveled. Since the sides are angled, the squared-off top edges will *look* beveled and complement the angle of the corners.

WOOD & FINISH. To build the tray, I started with ½"-thick clear pine, and planed it down to ⅜" thick for most of the parts.

One last thing. Since pine has a tendency to blotch when it's stained, I sealed the entire tray before staining, see page 31.

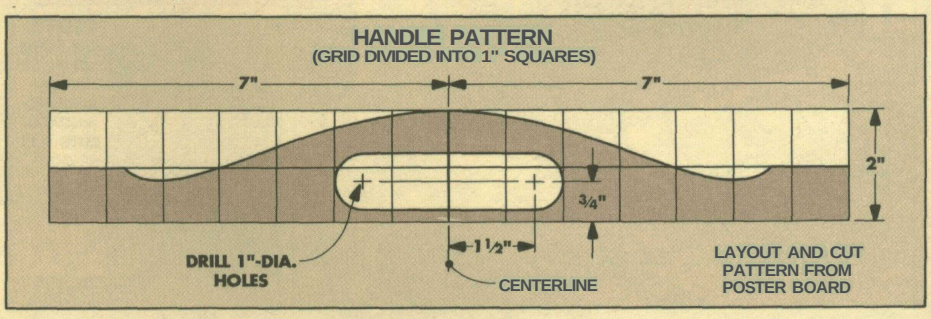

STEP-BY-STEP INSTRUCTIONS

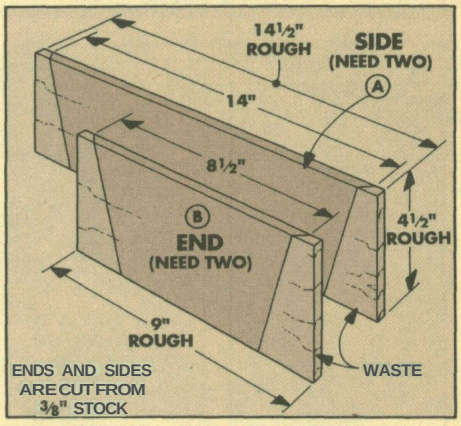

1 *The first step to building the tray is to cut compound miters on the side and end pieces. To do this, set the miter gauge to 75½° and tilt the blade to 43¼°.*

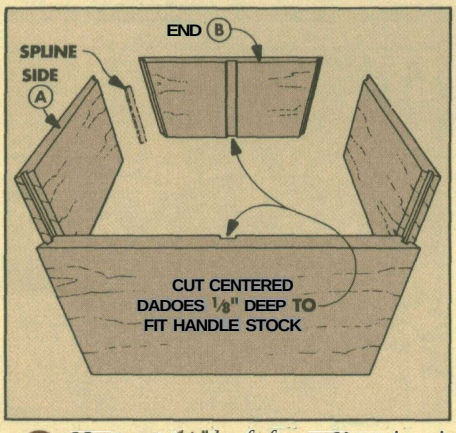

2 *Next cut ⅛" kerfs for splines in mitered ends of all four pieces. Then cut a dado in ends (B) for a handle. (For more on cutting a centered dado, see page 16.)*

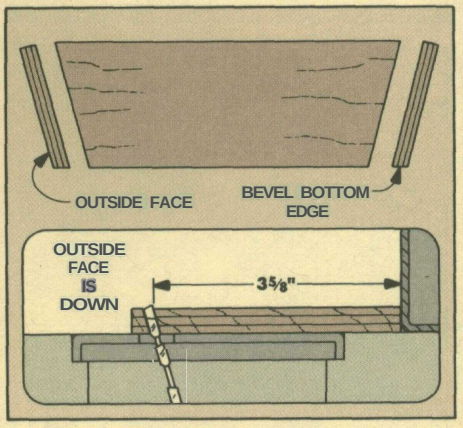

3 *Now tilt the saw blade to 15° and rip the ends and sides to final width. Cut off the bottom edge only. (Leaving the top edge alone adds a decorative touch.)*

EXPLODED VIEW

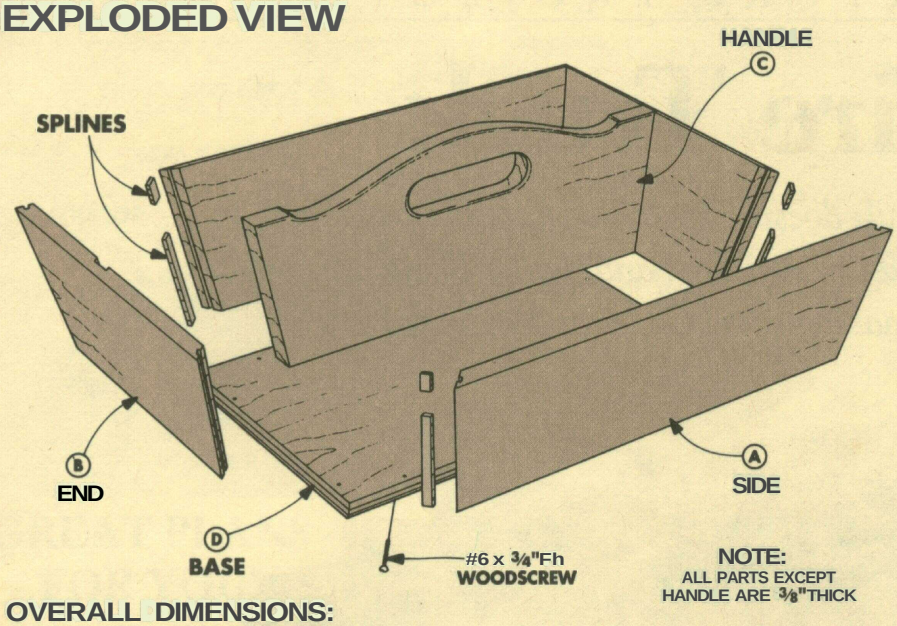

NOTE:
ALL PARTS EXCEPT HANDLE ARE 3/8"THICK

OVERALL DIMENSIONS:
14"L x 8½"W x 4⅞"H

MATERIALS

A	Sides (2)	3/8 x 3 5/8 - 14
B	Ends (2)	3/8 x 3 5/8 - 8½
C	Handled)	½ x 4½ - 13½
D	Based)	3/8 x 7 - 12½

- (8) #6 x 3/4" Brass Fh Woodscrews
- McCloskey's Stain Controller & Wood Sealer
- Stain - Minwax Early American
- Top Coat - General Finishes' Royal Finish (Satin)

CUTTING DIAGRAM

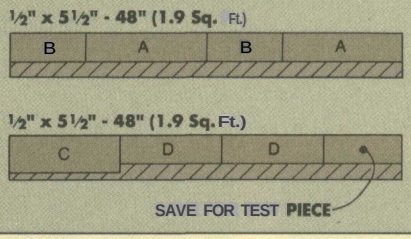

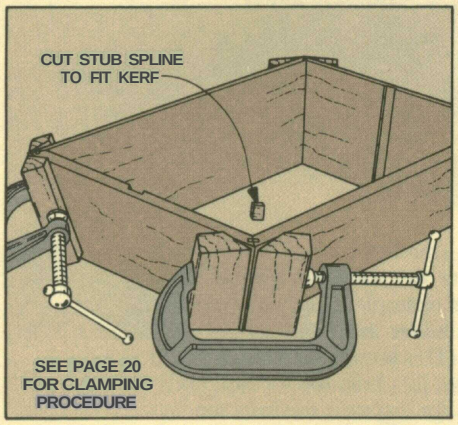

4 *Before gluing pieces together, insert splines (cut splines a bit shorter than width of sides). Then clamp up box. After glue dries, plug kerfs with stub splines.*

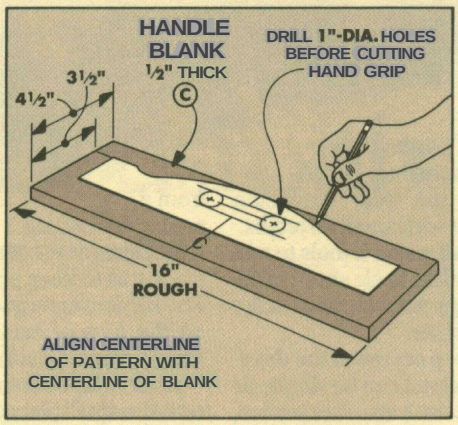

5 *To make the blank for the handle, first cut a piece of ½"-thick stock to rough size. Next, trace handle pattern on blank. Then drill and cut hand grip.*

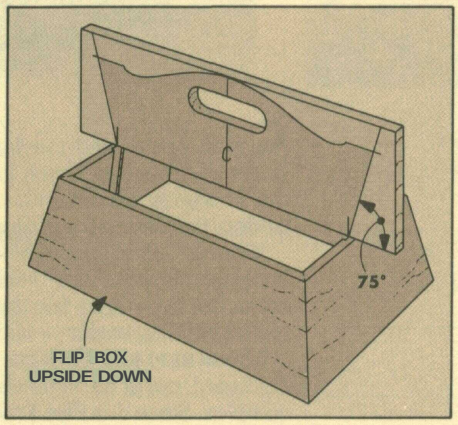

6 *To fit handle, first flip the box onto its top. Then center handle on box and mark length between dadoes. After handle is cut to length, cut top edge of handle.*

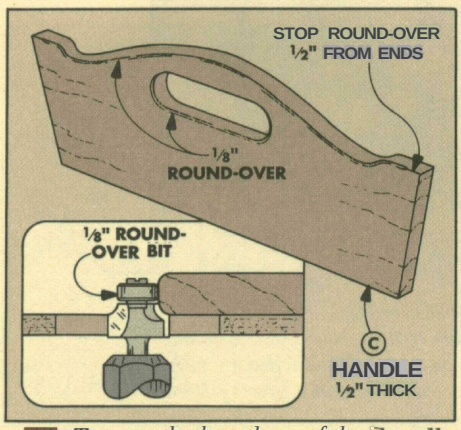

7 *To smooth the edges of the handle, round over the top edges and the hand grip. When routing top edges, stop ½" from ends. (They'll be completed later.)*

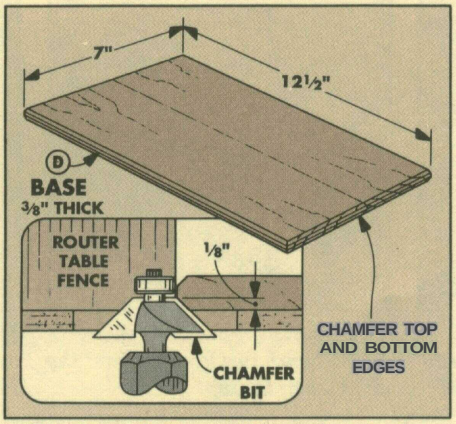

8 *Now glue-up a blank for the base. When cutting base to size, cut it 3/8" larger than bottom of box to allow for 3/16"-wide lip. Then rout a chamfer along edges.*

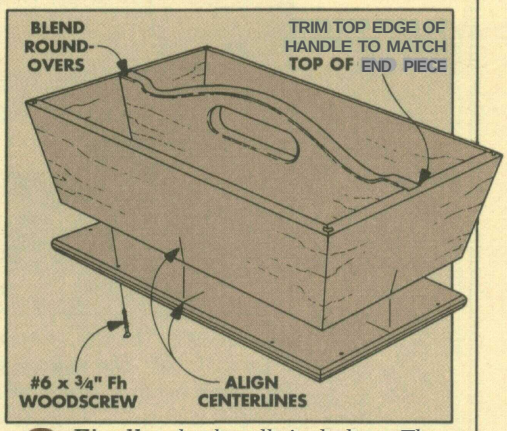

9 *Finally, glue handle in dadoes. Then glue base to handle, and screw — don't glue — base to box. The base must be allowed to move with changes in humidity.*

Fire Truck

Adding details doesn't always require the patience of a model maker or delicate hand work. There are some tricks for making small pieces and moving parts.

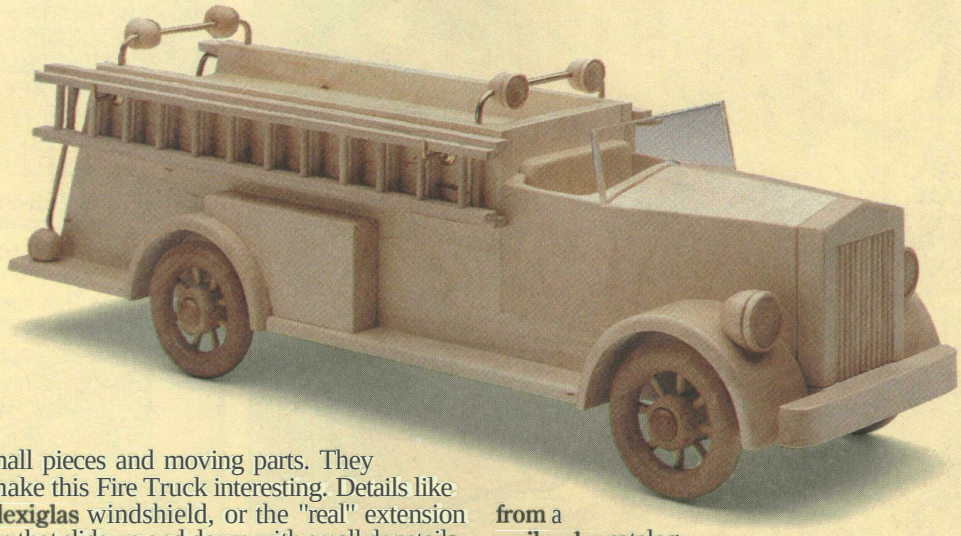

Small pieces and moving parts. They make this Fire Truck interesting. Details like the Plexiglas windshield, or the "real" extension ladders that slide up and down with small dovetails.

You don't need special model maker's tools to add these details to the Fire Truck. Just basic shop equipment But there are a few things you can do to make model building easier — and safer.

LOOSE REPLICA. The first step occurs at the drawing board, not in the shop. A model can be simple or complex. Since this Fire Truck isn't an exact replica, I could choose details that weren't too difficult to make. And some parts that may seem difficult can be bought pre-made at the hardware store or ordered from a mail-order catalog.

OVERSIZED PIECES. Another trick to building this truck was to keep parts oversize as long as possible. The ladders are a good example. The small dovetails on the legs of each ladder are routed *before* the pieces are cut to size. (This is explained on page 29.)

JIGS. And, of course, jigs help too — especially with the small pieces. For instance, the front fenders are half circles that have to be angled to match the shape of the front end. I did this with a shop-made pattern and a simple cutting jig (see page 27).

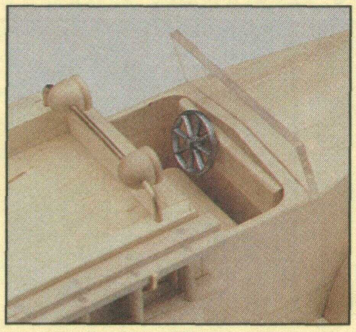

A piece of 1/8" Plexiglas becomes a windshield. The pewter steering wheel is a toy wagon wheel.

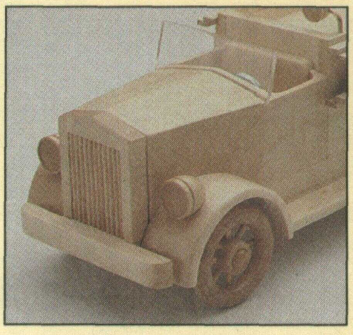

The engine compartment is shaped with two tapers. First the sides, then the top.

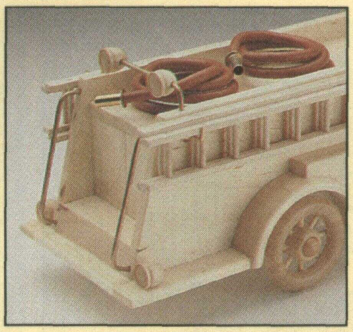

Hoses can be found in the plumbing section of a hardware store. For a nozzle, add a brass fitting.

EXPLODED VIEW

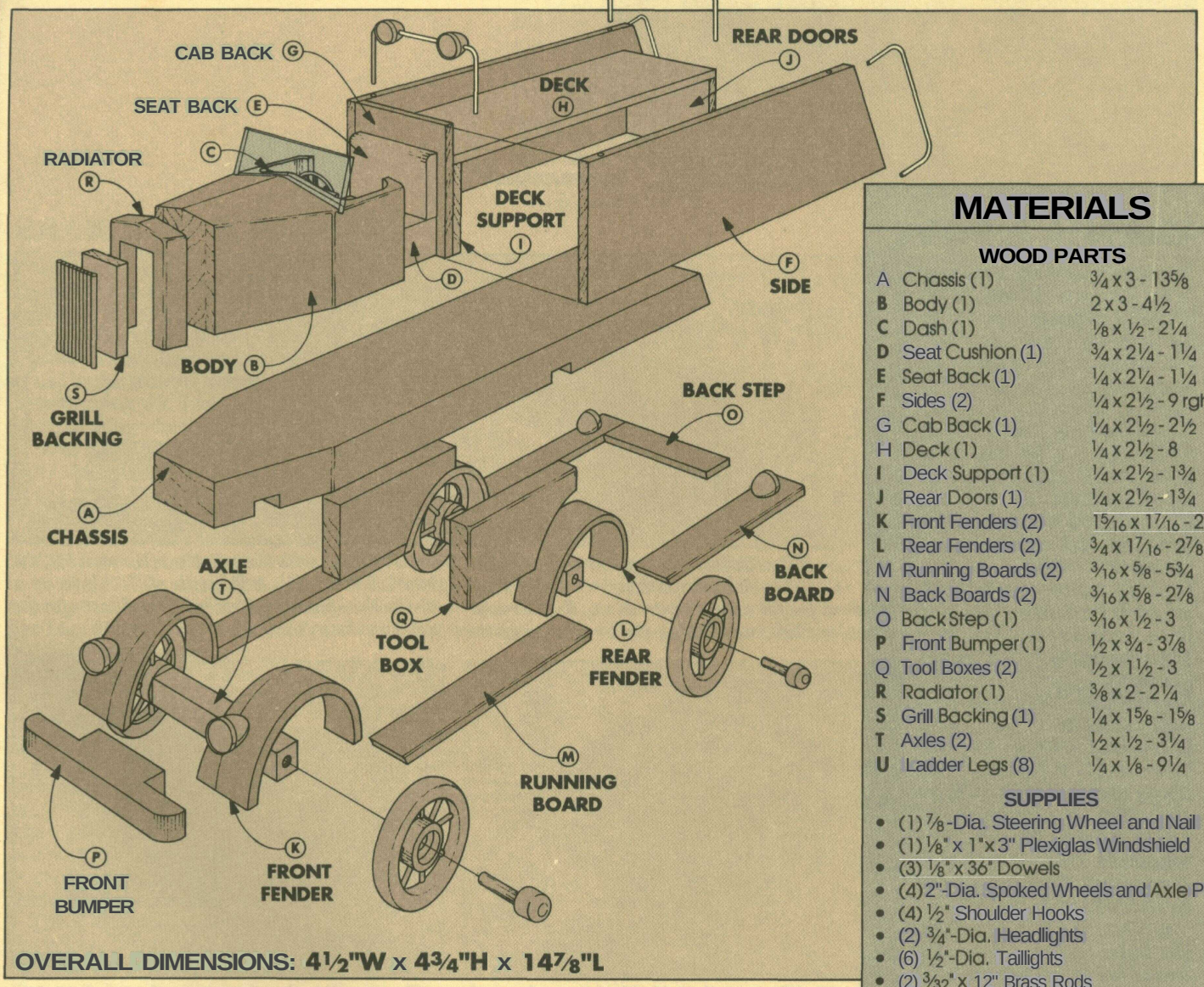

OVERALL DIMENSIONS: 4½"W x 4¾"H x 14⅞"L

MATERIALS

WOOD PARTS

A	Chassis (1)	¾ x 3 - 13⅝
B	Body (1)	2 x 3 - 4½
C	Dash (1)	⅛ x ½ - 2¼
D	Seat Cushion (1)	¾ x 2¼ - 1¼
E	Seat Back (1)	¼ x 2¼ - 1¼
F	Sides (2)	¼ x 2½ - 9 rgh.
G	Cab Back (1)	¼ x 2½ - 2½
H	Deck (1)	¼ x 2½ - 8
I	Deck Support (1)	¼ x 2½ - 1¾
J	Rear Doors (1)	¼ x 2½ - 1¾
K	Front Fenders (2)	15/16 x 1 7/16 - 2⅞
L	Rear Fenders (2)	¾ x 1 7/16 - 2⅞
M	Running Boards (2)	3/16 x ⅝ - 5¾
N	Back Boards (2)	3/16 x ⅝ - 2⅞
O	Back Step (1)	3/16 x ½ - 3
P	Front Bumper (1)	½ x ¾ - 3⅞
Q	Tool Boxes (2)	½ x 1½ - 3
R	Radiator (1)	⅜ x 2 - 2¼
S	Grill Backing (1)	¼ x 1⅝ - 1⅝
T	Axles (2)	½ x ½ - 3¼
U	Ladder Legs (8)	¼ x ⅛ - 9¼

SUPPLIES

- (1) ⅞-Dia. Steering Wheel and Nail
- (1) ⅛" x 1"x 3" Plexiglas Windshield
- (3) ⅛" x 36" Dowels
- (4) 2"-Dia. Spoked Wheels and Axle Pins
- (4) ½" Shoulder Hooks
- (2) ¾"-Dia. Headlights
- (6) ½"-Dia. Taillights
- (2) 3/32" x 12" Brass Rods

CUTTING DIAGRAM

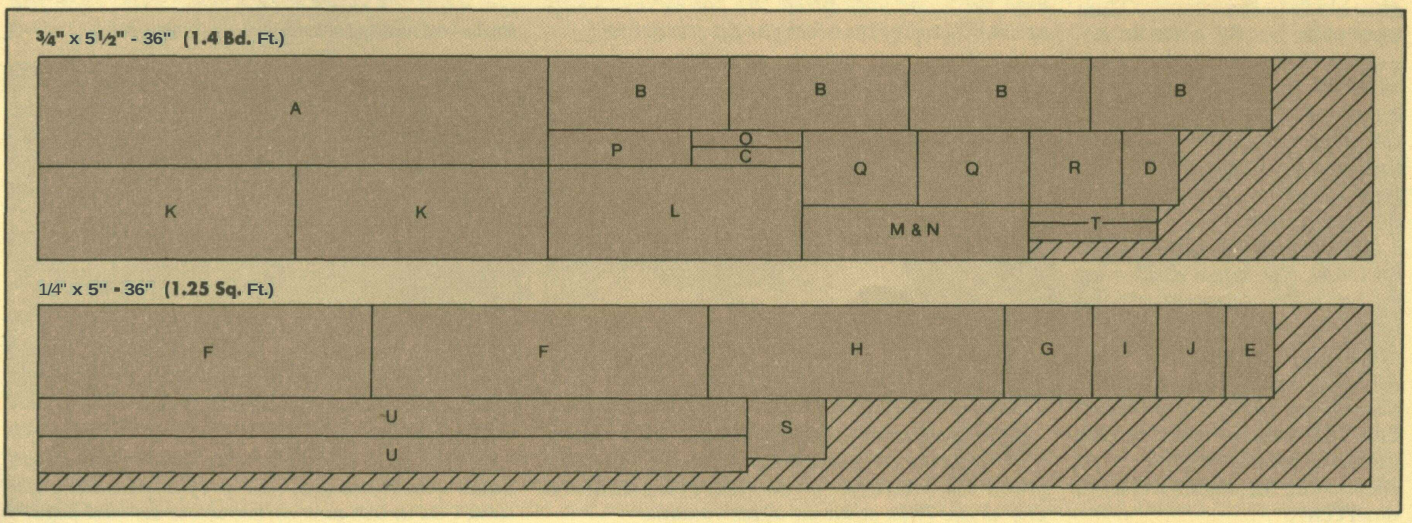

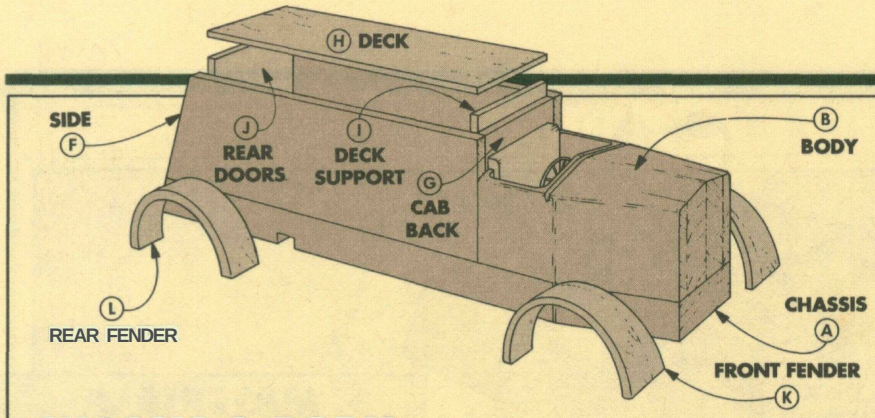

CHASSIS & BOPY

On an assembly line, the chassis is the base everything else is built on. I started this model **Fire** Truck the same way.

CHASSIS. The model's chassis starts as a simple **¾"-thick** maple blank **The back** of the blank is beveled, and it has a pair of dadoes across the bottom to house the axles, see Step 1.

CAB & ENGINE. The first **part** I added to the chassis **was** a block for the cab and engine compartments. The block is glued up from four pieces of **¾"-thick** stock. **By** orienting the glue lines vertically, one line runs down the center of the **"hood", see Step** 2.

CAB. This model isn't an exact replica. I combined the features of several fire trucks from the **1940's** and **50's.** Many of these trucks had open cabs — like a convertible. So I cut an angled kerf in the block for a **Plexiglas** windshield. **Then** I cleaned **out** a compartment for the **seat,** dash, and steering wheel, see Step 3.

ENGINE. Another thing I **really** liked on the vintage fire trucks was the tapered front ends. To get this look on my model, I glued the cab and engine block to the chassis. Then tapered both at the same time.

It takes two different set-ups to taper the engine compart**ment,** see Steps 4 and 5. **First,** the sides are tapered in towards the front **Then the top** is tapered from the center of the hood down to the sides.

This second set-up **may look** a little odd. The tapered sides lay flat on the band saw table so the back end sticks in the air, see Step 5 and photo on next page. And **you'll** also find that the first pass doesn't follow the centerline. **That's okay — once you** flip the piece around and make the second **cut,** the angles will meet dead center.

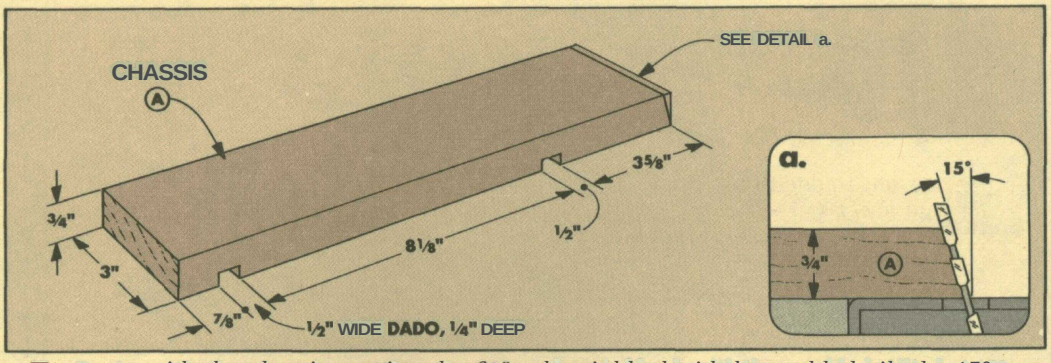

1 *Begin with the chassis, cutting the ¾"-thick blank to the finished dimensions. (I used maple **for all** the parts **on my** Fire Truck.) Next, cut an angle along the back edge of the chassis blank with the saw blade tilted at 15°, see detail. Then, with a ½"-wide dado **blade** or a **straight router bit, cut two ¼"-deep dadoes for the** axles on the bottom side **of** the chassis.*

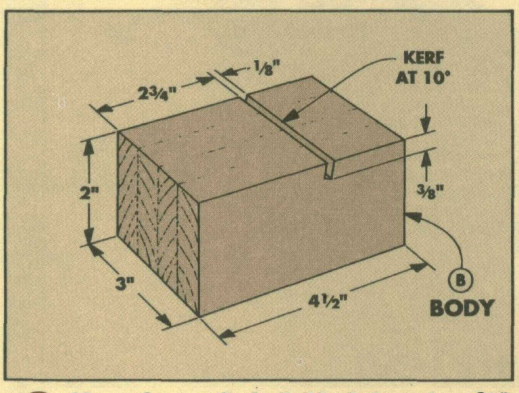

2 *Now, glue up the **body** block **from four ¾"-thick** pieces and cut it to final size. Then, **with** the saw blade tilted 10°, cut **⅛"-wide** kerf across the top **of** the block for the windshield.*

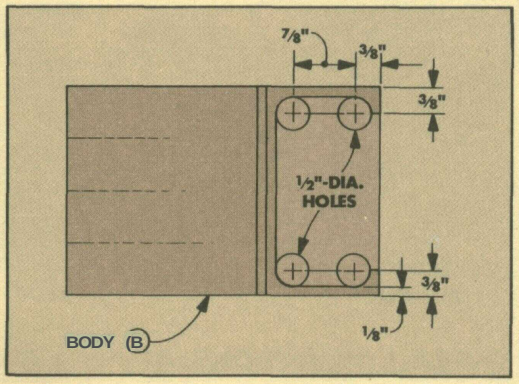

3 *To create the opening for the **cab,** first drill holes to establish the inside corners. Next clean out the waste with a band saw. **Then** file and sand the interior **of** the cab smooth.*

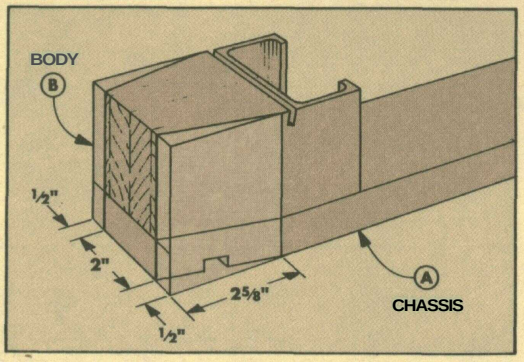

4 *To shape the engine compartment, **first** glue the body block to the chassis. When the glue dries, cut a taper on the sides so **the** front end **is 2"** wide. Then **sand** the sides smooth.*

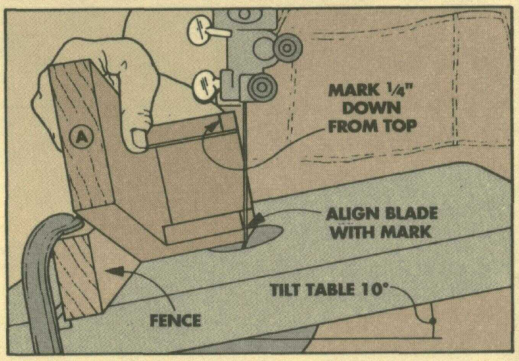

5 ***For the** cab top, tilt the table 10°. **Then mark** the back of cab **¼" down** from top. Align blade with mark and clamp a fence at this position. Cut in two passes, see photo on next page.*

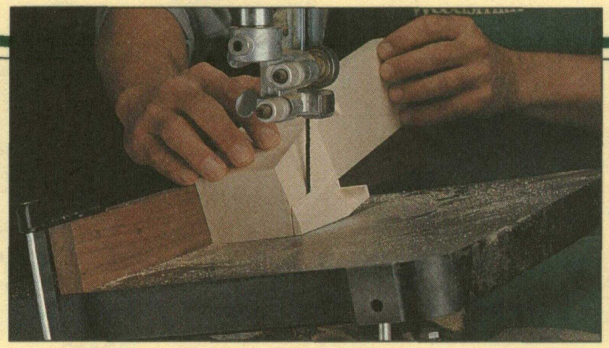

► *When shaping the front end, the top is tapered on the band saw in two passes. The back of the chassis sticks up off the table and is flipped between cuts.*

BACK END & FENDERS

You'd expect that the inside of the cab would be completed at the end of the assembly line. But once the back end of this Fire Truck is added, there's no room to nail in the steering wheel. So before going on, I added the dash, steering wheel, and seats.

Note: Most of the remaining parts are cut from thin stock. So at this point, I resawed enough wood for all the thin pieces. Refer to the Materials List on page 25 for the parts and thicknesses.

BACK END. The back end of the Fire Truck body is just a hollow box. It's built in two stages. You start with the cab back and the sides, see Step 7. Then the deck support and rear doors are added, and the deck is glued on top, see Step 8.

FENDERS. After the back end was complete, I began on the details, starting with the fenders. The fenders look like thin stock bent into half circles. But they're really bandsawn from two rectangular blanks, see Step 9.

Though I like the tapers on the front end, they added a little extra work for the front fenders. First, they have to be wider than the back fenders. To do this, I simply laminated two pieces together out of ¾"-thick stock.

TAPER FENDERS. The fenders in the front also have to be cut to match the taper of the engine compartment. To get the correct angle, I decided to take the guesswork out of it.

First, I outlined the chassis onto a piece of paper and laid the fender on this pattern to locate the cut lines, see Step 10. Then I built a small "sled" and taped the fenders to it, see Step 11. This let me bandsaw the front fenders to the shape of the front end.

FINISHING **NOTE.** If you want to add color to your Fire Truck, now would be a good time to dye the body, see the box on page 30.

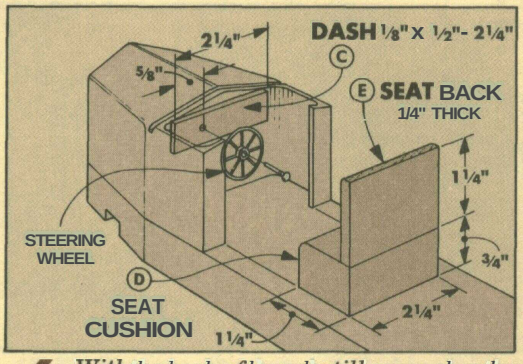

6 *With the back of the cab still open, glue the dash in place and drill a hole for the steering wheel. After it's nailed in, cut the seat back and seat cushion to size and glue them into cab.*

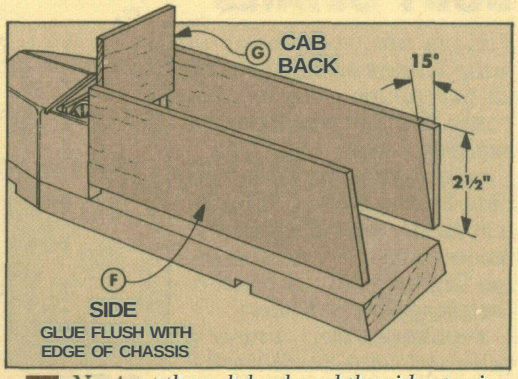

7 *Next cut the cab back and the sides to size. The angle on the back edges of the sides should match the bevel of the chassis. Then, glue all the pieces to the chassis.*

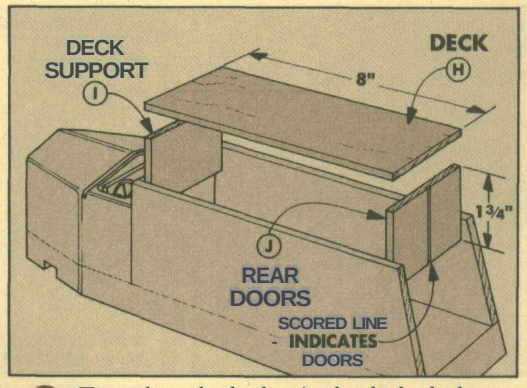

8 *To enclose the body, rip the deck, deck support and rear doors to fit between the sides. (The deck support and rear doors are identical pieces.) Before gluing, score a line for rear doors.*

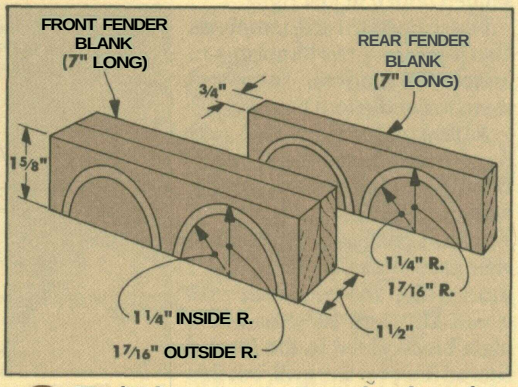

9 *The fenders are cut out on a band saw from ¾" stock. (The front fender is made from two pieces glued together.) Cut the inside arcs first. Then sand and round the top, outside edges.*

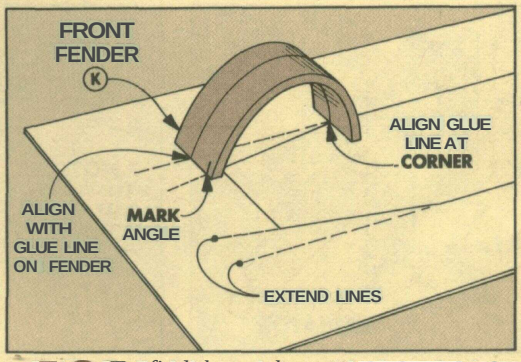

10 *To find the angle to cut the front fenders, first outline chassis, extending sides with dashed lines. Position the glue line of fender on the dashed line and mark the front of fender.*

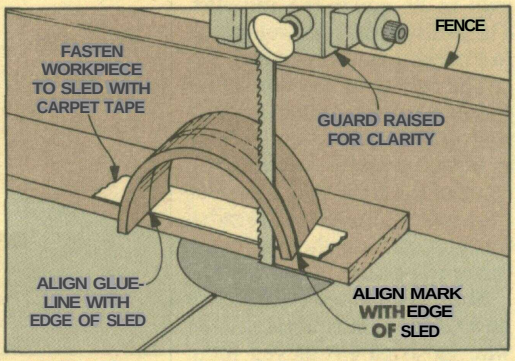

11 *Next, make a sled from a piece of scrap and attach the fender so the marks align with the edge of the sled. Cut and sand the fenders. Then glue all four fenders to the chassis.*

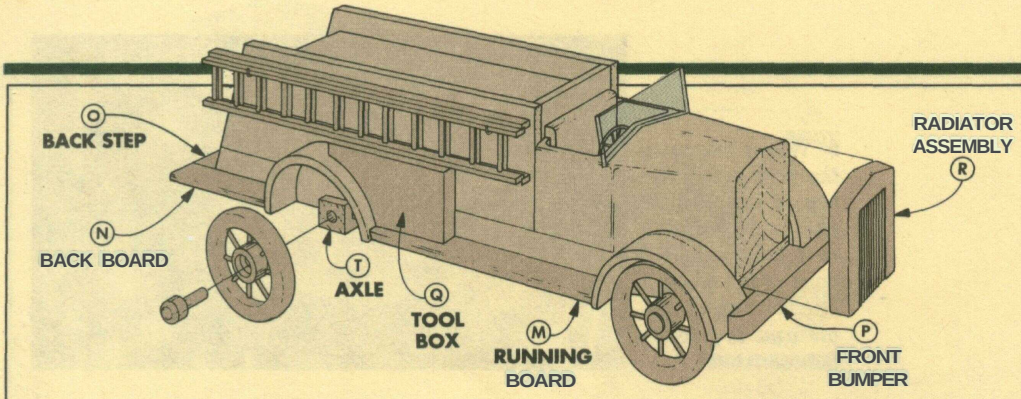

BODY DETAILS

Vintage fire trucks came in many different models. But they all had running boards, tool boxes and fancy radiators. I added these next.

RUNNING BOARDS. The running boards are 3/16" thick to match the "thickness" of the fenders. After they're cut to size, sanding the ends will improve their fit against the fenders.

TOOL BOXES. Next, I made a pair of tool boxes that fit over the rear fenders, see Step 13. To get a good fit, I cut the tool boxes a little wide (tall). Then once the arc was cut, the bottom edge was sanded until it fit just right.

Note: Posterboard templates also work. Cut the templates to match the fenders. Then, use them to cut the tool boxes.

RADIATOR DESIGN. The next thing I added was the radiator. But it took a few tries to come up with the final design.

In the first design, the radiator was part of the hood — but I didn't like the exposed end grain. The next radiator was a plain block glued to the front. I scored lines for the grill, but this design wasn't quite right either.

I wanted to match the "style" of the old radiators. What I ended up with was a separate grill to fit *inside* the radiator. The grill is a row of dowels glued to a backing board, see Step 15.

The outside of the radiator requires a little more than just cutting out the shape. You also have to bevel the sides to match the taper of the front end. Then for the profile of the top of the radiator, you can use the hood as a pattern, see Step 14.

Shop Tip: I glued on the axles now (Step 16) but only test fit the wheels. Then I removed them while adding the final details so the truck wouldn't roll around. When the truck was complete, I glued the axle pins in the axles.

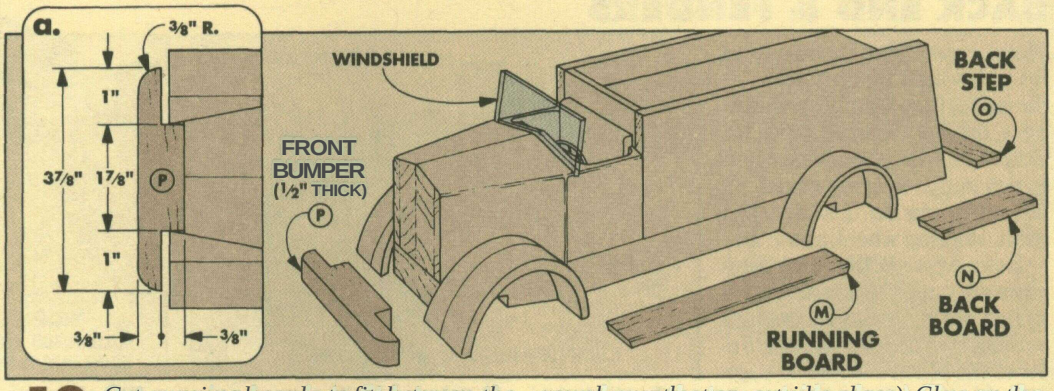

12 *Cut running boards to fit between the fenders. Then cut back boards to extend 1/2" behind chassis. (Before gluing on these parts, sand ends to match the curve of fenders and round over the top, outside edges.) Glue on the back step (bevel mating edge to match chassis). Now cut out and glue the bumper in place. Then make windshield and attach with "instant" glue.*

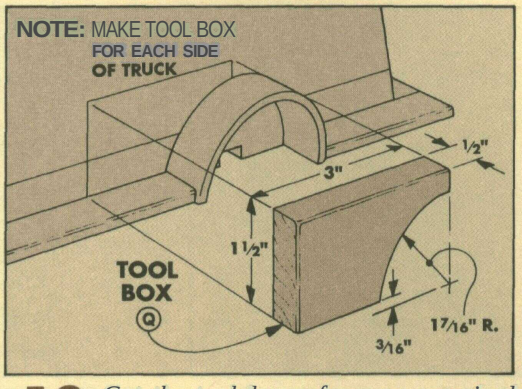

13 *Cut the tool boxes from an oversized blank. Draw an arc to match the rear fenders. Then, cut and sand it smooth. Trim the bottom edge for a tight fit and glue it in place.*

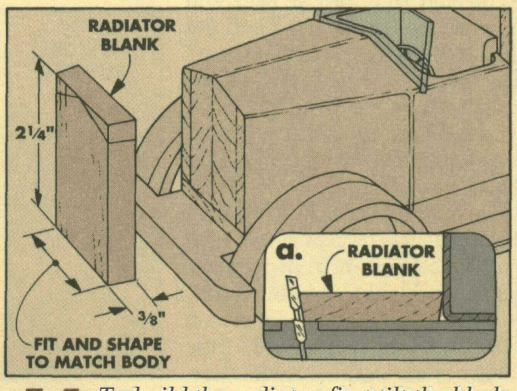

14 *To build the radiator, first tilt the blade to 10° and rip the 3/8"-thick workpiece to width, see detail. Then mark and cut the top angles to match the front of the chassis.*

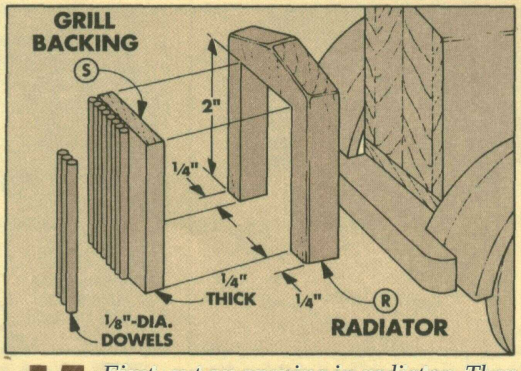

15 *First, cut an opening in radiator. Then for the grill, glue 1/8" dowels to an oversize backing board. When dry, cut to fit radiator opening. Then, glue radiator and grill to chassis.*

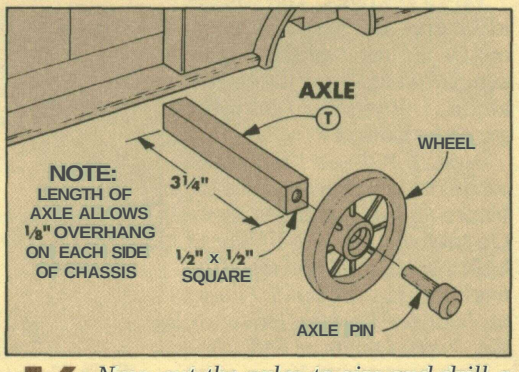

16 *Now, cut the axles to size and drill a 7/32"-dia. hole in each end. Glue the axles to the chassis. Then add wheels. (You may want to wait until later to glue the wheels in, see text.)*

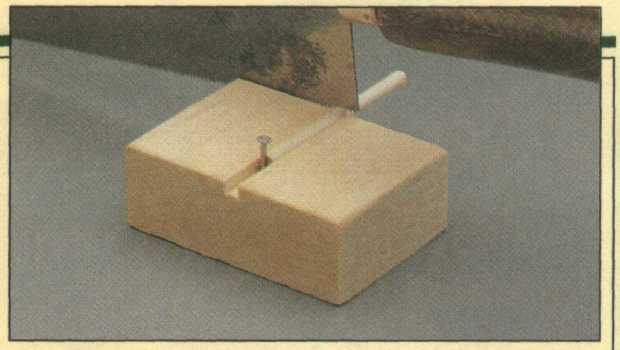

► *To cut the ladder rungs to a uniform **length**, use this simple jig. First, on a piece of scrap cut a groove that matches the diameter of the dowels. Then use a nail as a stop.*

LADDERS

The ladders are the first pieces most people will want to pick up when they see this model. The extensions slide up and down just like the real thing.

So how do these ladders work? Interlocking "dovetail **rabbets**" hold the sliding sections together. The challenge is building both the legs and the rungs parallel so the ladders slide smoothly.

LEGS. The two extension ladders are really four individual ladders. You start with two oversized blanks — four legs are ripped from each blank.

RUNGS. The spacing between the ladder rungs isn't critical. But what *is* important is that the two holes for each rung be drilled in exactly the same place on each leg.

I could have designed a jig to do this, but it wouldn't have saved any time or been any safer. Instead, I used a fence with a stop block, moving it for each set of rung holes, see Step 19. And to help keep track of which end of the **leg** was **the** top, I marked each leg with an "X".

LADDER ASSEMBLY. The trick with these ladders is to build the inner ladder **first**, then assemble the outer ladder around it, see Steps **20 and** 21.

Since there's no glue at this **point**, you don't have to worry **that the** two ladders will be stuck together. This way, you can get a smooth-sliding, custom fit — as long as the rungs have been cut to the exact same length. To ensure this, I made a simple jig, see photo above.

The ladders stayed together so well that I was tempted not to glue them at all, but I did put a drop of quick-setting "instant" glue on the end of each dowel. And to hang the ladders, I found some ½" shoulder hooks used to hang jewelry and keys.

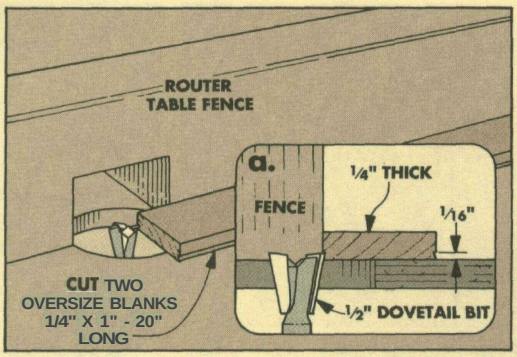

17 *The legs of the extension ladders are cut from two ¼"-**thick**, oversize blanks. Skim both edges of the blank with a dovetail bit, holding the pieces tightly against the fence.*

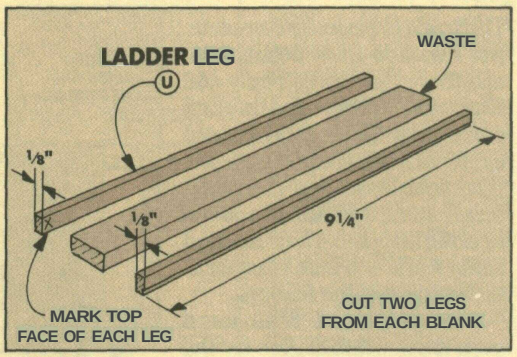

18 *Now, cut the two blanks to length and rip two ⅛"-**wide legs** from each one. Then, to make sure the legs are **oriented** correctly, mark the **top** face of each leg with an "X".*

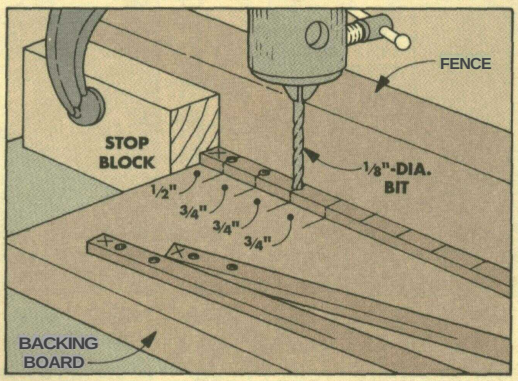

19 *On one leg, mark the rung positions. Then center an ⅛"-**dia.** drill bit on the **workpiece** and set the stop block. When drilling, keep the "X" **face** up and against the stop block.*

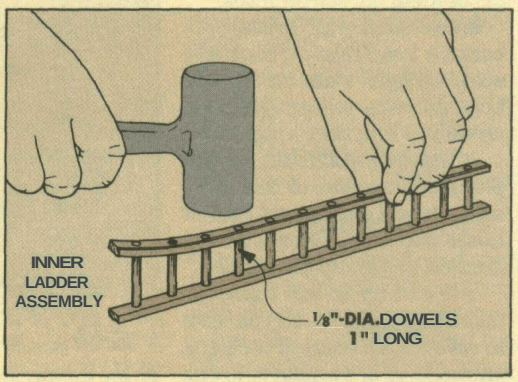

20 *Now cut dowels for the inner ladder rungs, see photo above. Dry assemble the inner ladder (dovetail rabbets out), tapping lightly with a mallet until the dowels are flush.*

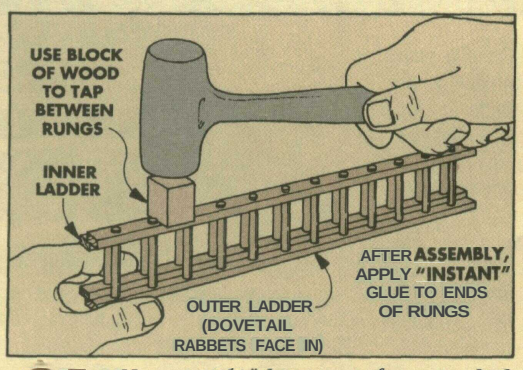

21 *Now cut 1¼"-**long** rungs for outer ladder. Then dry assemble outer ladder with dovetails in, sandwiching the inner ladder. When ladders slide smoothly, sand rungs flush.*

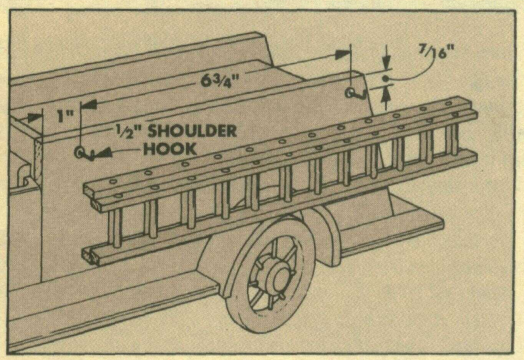

22 *To hang the ladders, drill pilot holes for ½" shoulder hooks. Then once the hooks are screwed in place, hang the ladders (with the outer ladders against the sides).*

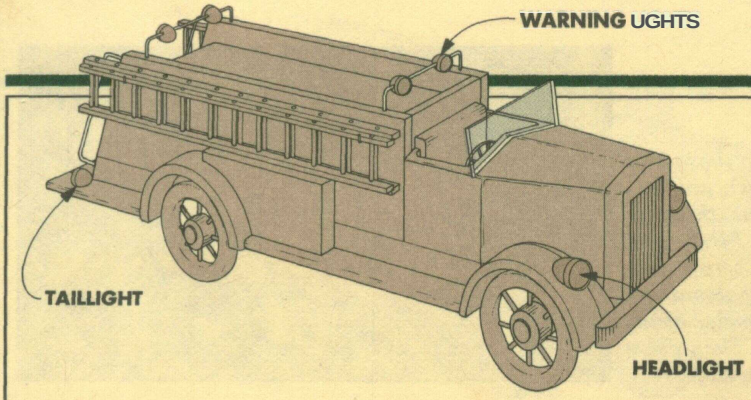

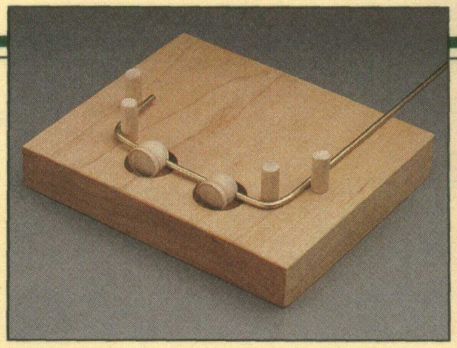

► *To bend the brass rods for the rails, build a form using 1/4" dowels. The front dowels should be 2 1/2" apart. Also, drill out a depression for the lights.*

LIGHTS & HAND RAILS

The truck is basically complete. But I wanted a few details here and there that would really add character. So I browsed through some mail order catalogs and explored a local hardware store.

HEADLIGHTS. In a catalog I found some miniature wooden headlights. But they needed some work — a little sanding to fit the curve of the fenders.

OTHER LIGHTS. I also used even smaller headlights for the taillights and warning lights. I had to modify these too. They had mounting stems that I didn't need, so I had to find a safe way to cut them off, see Step 25a.

HAND RAILS. 3/32" brass rods became hand rails on back and warning light rails on top. To bend the rods uniformly, I came up with a form, see photo above.

OTHER POSSIBILITIES. In the plumbing section of the hardware store, I even found rubber hoses and brass fittings for the nozzles, see photo on page 24.

You can try to add more details if you'd like. But if you want to save a little time, all the parts shown here are available in one kit, see next page.

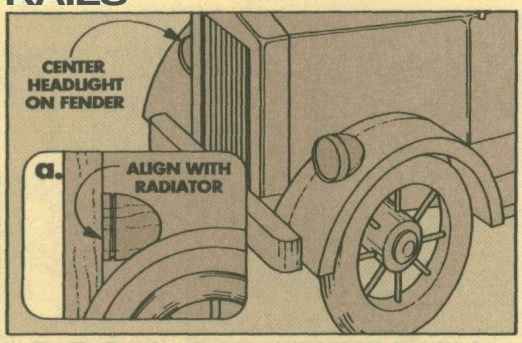

23 *Sand a slight curve on each headlight to match the arcs of the fenders. Then glue on each headlight so that it's centered on the fender and aligns with the radiator.*

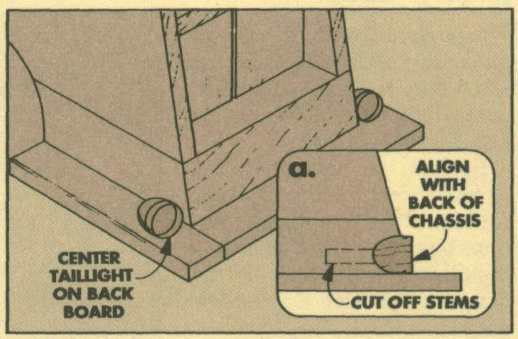

24 *Next, cut stems off taillights and flatten bottom edges so they rest on back boards, see detail. Then center taillights on back boards (even with back of chassis) and glue in place.*

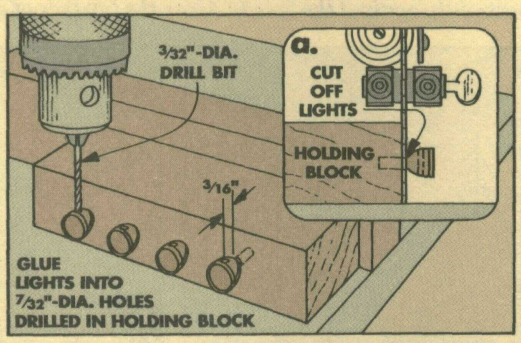

25 *For the warning lights, first glue lights in a block of scrap. Then drill 3/32" holes so the lights can be threaded on the rails. Finally, cut lights from block with band saw, see detail.*

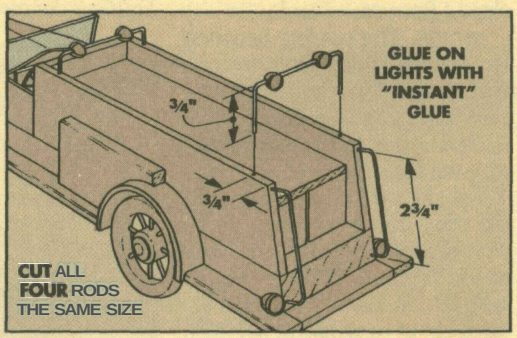

26 *Now, thread two lights onto a 6"-long brass rod and bend the rod, see photo above. Drill holes 3/8" deep on the sides and chassis. Finally, trim rails and glue them in place.*

FIRE ENGINE RED

When I was a kid, a firetruck was *always* red. So I decided to add some color to one of the trucks I built. But I didn't want to hide the beauty of the wood. Instead of painting the truck, I used a water-soluble aniline dye. This is a translucent finish that allows the wood to show through.

ANILINE DYE. The aniline dye I used comes as a powder. When dissolved in water, it's non-toxic, odorless, and nonflammable. But it's still a good idea to use rubber gloves when applying the dye. It'll really stain your hands. Note: For sources of aniline dyes, see next page.

Mix the powder in a glass jar. For the Fire Truck, I added about 1 ounce of water to 1/2 teaspoon of dye.

APPLYING DYE. To apply the dye, I used a foam brush and gave the wood a liberal coat. Then as it dried, I brushed the dye out evenly.

While it's wet, the wood will look like it has a top coat on it. But as the wood dries, the color will change and become dull. Don't let this bother you. My red Fire Truck turned slightly orange as it was drying. After applying the top coat, it returned to a deep, rich red.

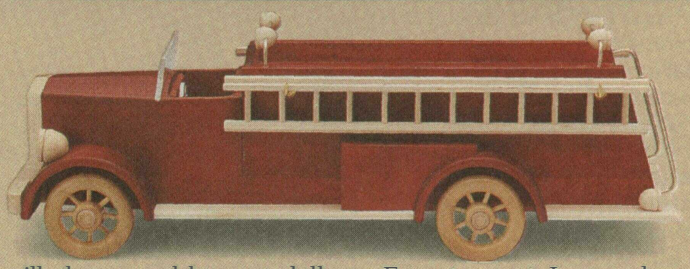

For a top coat, I sprayed on two coats of Deft Semi-Gloss Clear Wood Finish from an aerosol can. (This is the same top coat I used for the Fire Truck that was left natural.)

Sources

JELLY CUPBOARD

A hardware kit and tin panels for the Jelly Cupboard are available separately from *Woodsmith Project Supplies*. This way you can buy the kits you need.

HARDWARE KIT. The hardware kit includes all of the basic hardware needed to build the Jelly Cupboard. (The tin is not included.)

- (1) Maple Knob
- (3) Steel Butt Hinges
- (1) 3/8" Birch Dowel
- (3) 1/4" Birch Dowels
- (24) 1 1/2" Fh Screws
- (6) 1 3/4" Fh Screws

W87-787-100 Jelly Cupboard Hardware Kit..... $8.95

TIN PANELS/PATTERNS. If you are interested in making punched tin panels for your Jelly Cupboard, you will want to order the Tin Panel & Pattern Kit Includes four unpunched tin panels (10" x 14"), instructions for aging and punching tin, and four paper copies of one panel design. Note: Please specify which of the designs you want (see drawings above).

W87-787-110 Tin Pattern & Panels Kit $14.95

SQUARE-CUT NAILS. On page 8 we talked about using square-cut nails as an alternative when assembling the Jelly Cupboard. We're offering these authentic 4d (1 1/2" long) finishing nails.

W87-1003-331 4d Square-Cut Finishing Nails ... $4.50 bag.

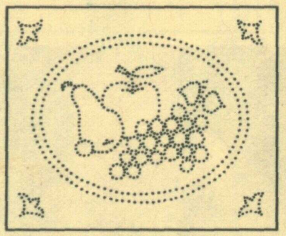

HARVEST FRUIT

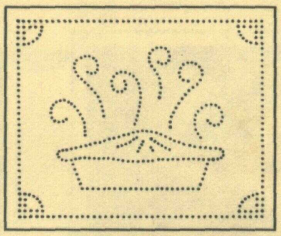

GRANDMA'S PIE

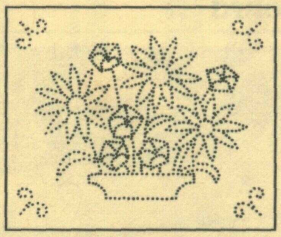

SPRING FLOWERS

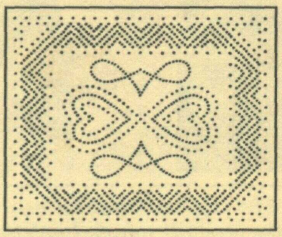

HEARTS ON A BLANKET

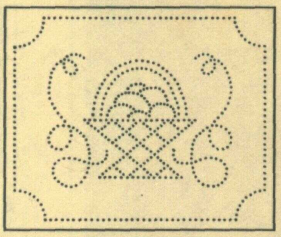

FRUIT BASKET

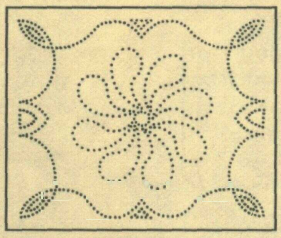

DAISY SWIRL

FIRE TRUCK

A hardware kit to build the Fire Truck on page 24 is available from *Woodsmith Project Supplies*. (Note: Wood is not included with this kit.)

- (1) Pewter Steering Wheel, 7/8" Dia., with zinc-plated axle nail
- (1) 1/8" Clear Plexiglas, 1" x 3"
- (8) Birch Dowels, 1/8" x 12"
- (4) Spoked Wheels, 2" Dia.
- (4) Axle Pins, 7/32" Shaft
- (4) 1/2" Shoulder Hooks
- (2) Large Headlights, 3/4" Dia.
- (6) Taillights, 1/2" Dia.
- (2) Brass Rods, 3/32" x 12"
- (1) Red Flexible Silicone Tubing (Fire Hose), 3 Feet Long
- (2) Miniature Hose Nozzles

W87-787-200 Fire Truck Hardware Kit.....$16.95

FINISH. We built two versions of the Fire Truck. The natural wood one (page 24) was sprayed with Deft Clear Wood Finish (Satin). It's found at many stores and the sources listed below.

The red one (page 30) was dyed with aniline dye, then sprayed with Deft. *Woodsmith Project Supplies* is offering Liberon Red Aniline Dye. It's a powder that's dissolved in water.

W87-4001-180 Crimson Red Aniline Dye, 1 oz. $5.95

FINISHES

We finished the Jelly Cupboard and the Silverware Tray by starting with a coat of wood sealer to help the pine absorb the stain evenly.

Then we stained the Jelly Cupboard with a 50/50 mix of Minwax's Golden Oak and Colonial Maple. And the Silverware Tray with Early American. Minwax products are available through retail stores and the catalogs below.

After the stain dried, we applied two coats of General Finishes' Royal Finish (satin). *Woodsmith Project Supplies* is offering the wood sealer and Royal Finish.

W87-4003-321 McCloskey's Stain Controller & Sealer.....$5.95 pint

W87-4003-602 Royal Finish Oil and Urethane Top Coat (Satin) .....$9.95 quart

COMPOUND MITERS

On page 18 we mentioned that there's a good booklet available with charts for setting up to cut compound miters. It's called the "Woodworker's Guide to Compound Miters."

This booklet is available from Bridge City Tool Works for $5.00. Phone 800-253-3332.

ORDER INFORMATION

BY MAIL

To order by mail, use the order form that comes with the current issue. The order form includes information on handling and shipping charges, and sales tax.

If the mail order form is not available, please call the toll free number at the right for more information on specific charges and any applicable sales tax.

BY PHONE

For fastest service use our Toll Free order line. Open Monday through Friday, 7:00 AM to 7:00 PM Central Time.

Before calling, have your VISA, MasterCard, or Discover Card ready.

1-800-444-7527

Note: Prices subject to change after August, 1993.

MAIL ORDER SOURCES

Similar hardware and supplies may be found in the following catalogs. Please call each company for a catalog or information.

Cherry Tree Toys
800-848-4363
Spoked Wheels, Dowels, Pewter Steering Wheel, Headlights, Taillights, Shoulder Hooks

Constantine's
800-223-8087
Wood Knob, Spoked Wheels, Dowels, Deft, Aniline Dyes

Country Accents
717-478-4127
Tin: Unpunched and Prepunched

Craftsman Wood Service
800-543-9367
Dowels, Deft, Minwax

Garrett Wade
800-221-2942
Aniline Dyes

Meisel Hardware
800-441-9870
Spoked Wheels, Dowels, Steering Wheel, Headlights, Shoulder Hooks

Woodworker's Supply
800-645-9292
Aniline Dyes, Dowels, Spoked Wheels

Van Dyke's
800-843-3320
Wood Knob, Unpunched Tin, Square-Cut Nails, Dowels, Pewter Steering Wheel

Tremont Nail Company
800-842-0560
Square-Cut Nails

The Woodworkers' Store
612-428-3200
Wood Knob, Spoked Wheels, Dowels, Stain Controller, Minwax, Royal Finish

Final Details

Jelly Cupboard

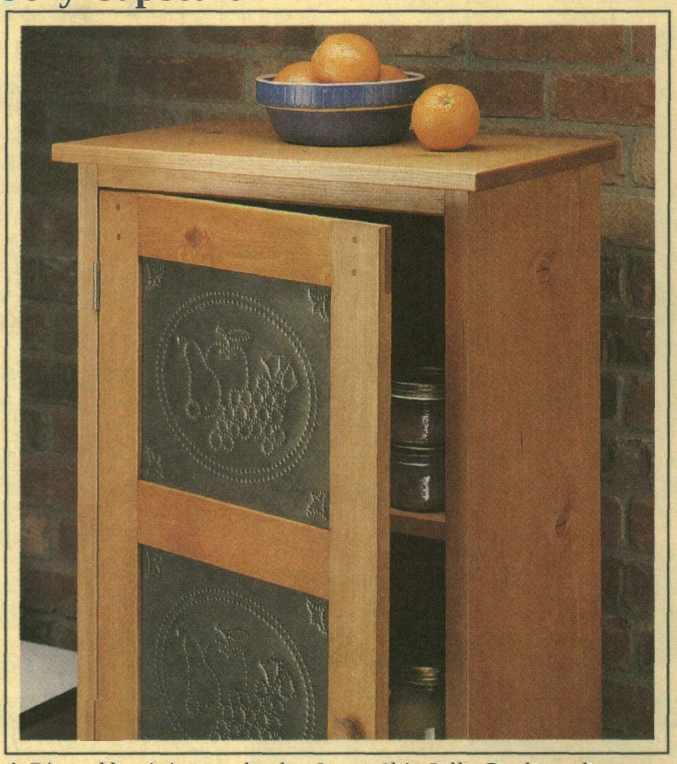

A Pinned lap joints make the door of this Jelly Cupboard strong, yet easy to build. The tin panels are punched by hand with an awl and hammer. Six different "country" patterns are available.

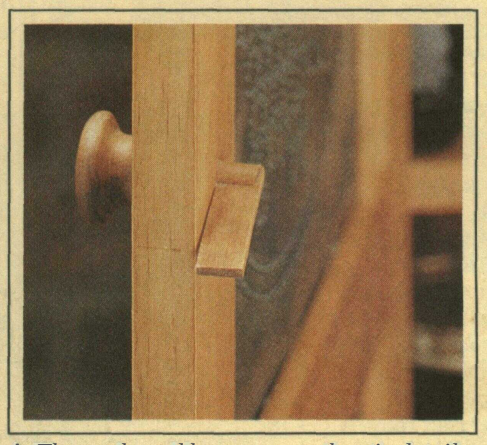

A The cupboard has many authentic details. Like a small maple knob that turns a "flipper" for locking the door closed.

Silverware Tray

A In the kitchen, this Silverware Tray with splined compound miter joints can be used to hold fruit. Use it in the shop and it's a tote for carrying around small hand tools and hardware.

Fire Truck

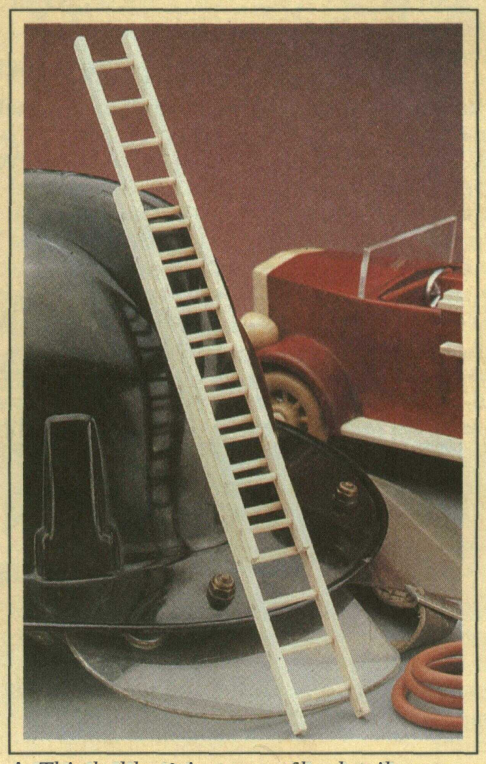

A This ladder is just one of the details on our model Fire Truck. Sliding dovetails hold the two sections together and allow it to extend.